TOWN OF CHATHAM, MASSACHUSETTS

TRANSFER STATION REDEVELOPMENT PROJECT

97 SAM RYDER ROAD, CHATHAM MASSACHUSETTS

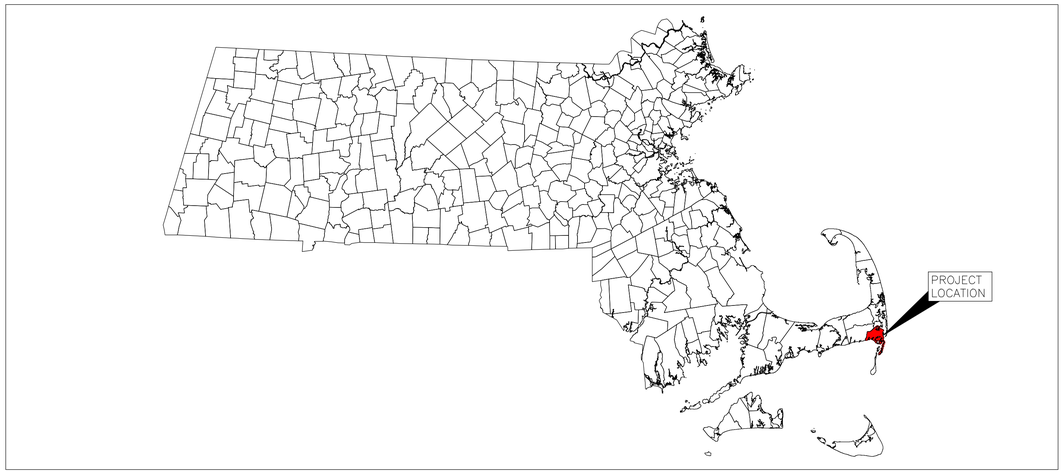

LOCATION MAP

NOT TO SCALE

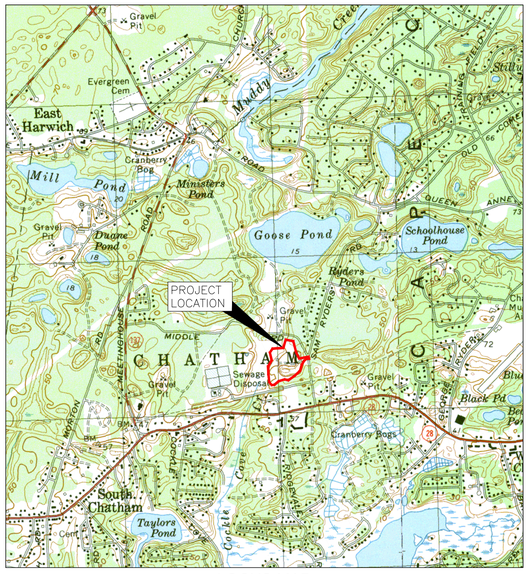

LOCUS MAP

1" = 1,500'

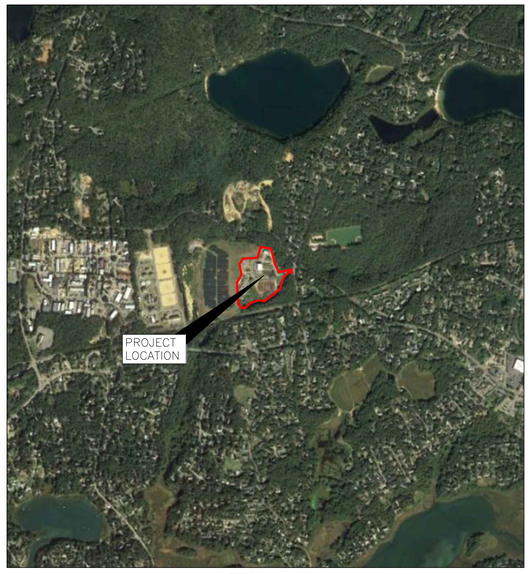

AERIAL MAP

1" = 1,000'

SHEET LIST TABLE

SHEET NUMBER	SHEET TITLE
G000	COVER PAGE
G001	GENERAL NOTES AND LEGEND
C100	EXISTING CONDITIONS SITE PLAN
C101	SITE PREPARATION AND PHASING PLAN: I
C102	SITE PREPARATION AND PHASING PLAN: II
C103	SITE LAYOUT AND MATERIALS PLAN
C104	GRADING PLAN
C105	DRAINAGE PLAN
C106	TRAFFIC MANAGEMENT AND SIGNAGE PLAN
C107	WATER AND SEWER UTILITY PLAN
C500 - C507	CONSTRUCTION DETAILS
S101	GENERAL NOTES & TYPICAL DETAILS
S102	FOUNDATION PLAN & SECTIONS
E001	ELECTRICAL LEGEND, ABBREVIATIONS AND GENERAL NOTES
ED001	ELECTRICAL SITE DEMOLITION PLAN
E002	ELECTRICAL SITE PLAN
E501	ELECTRICAL DETAILS I
E502	ELECTRICAL DETAILS II
E601	ELECTRICAL SCHEDULES AND DIAGRAMS

SITE INFORMATION TABLE

SITE ADDRESS:	97 SAM RYDER ROAD
SITE CITY/TOWN:	CHATHAM
SITE STATE:	MASSACHUSETTS
SITE ZIP:	02633
PARCEL ID:	5F_0_T3_0
SITE AREA:	80.0 ACRES
LAND OWNER:	TOWN OF CHATHAM
OWNER ADDRESS	549 MAIN STREET
OWNER CITY/TOWN:	CHATHAM
OWNER STATE:	MASSACHUSETTS
OWNER ZIP:	02633

COMMONWEALTH OF MASSACHUSETTS
BRIAN J McCORMACK
ENVIRONMENTAL
No. 47895
REGISTERED PROFESSIONAL ENGINEER

BJMcCormack

Weston & Sampson

Weston & Sampson Engineers, Inc.
55 Walkers Brook Drive, Suite 100
Reading, MA 01867
978.532.1900 800.SAMPSON
www.westonandsampson.com

Issued Date:

MARCH 13, 2026

811 Know what's below. Call before you dig.

COA:

COPYRIGHT © 2026 BY WESTON & SAMPSON
THIS DRAWING HAS BEEN PREPARED FOR THE EXCLUSIVE USE OF THE CLIENT & PROJECT NAME LISTED ON THIS DRAWING ONLY.

REPRODUCTION, RELEASE OF UTILIZATION OF THE DRAWING CONTENT BY OTHER CLIENTS / FIRMS AND ON OTHER PROJECTS IS PROHIBITED BY LAW.

WESTON & SAMPSON RETAINS THE EXCLUSIVE USE OF THE INTELLECTUAL PROPERTY CONTAINED HEREIN.

Issued For:

BIDDING

COPYRIGHT 2026 WESTON & SAMPSON

GENERAL NOTES

1. EXISTING CONDITIONS ARE DERIVED FROM HISTORICAL UTILITY DRAWINGS PROVIDED BY THE TOWN OF CHATHAM, A SITE SURVEY PERFORMED BY WESTON & SAMPSON ENGINEERS, INC., DECEMBER 2019, AND AS-BUILT INFORMATION FROM THE CHATHAM TRANSFER STATION GARAGE PROJECT COMPLETED IN NOVEMBER 2025.
2. DATA OBTAINED FROM SUBSURFACE EXPLORATIONS (IN THE FORM OF BORINGS AND TEST PITS) IS PROVIDED AS AN ATTACHMENT TO SPECIFICATION SECTION 00 31 32 - SUBSURFACE DATA.
3. ALL BIDDERS ARE REQUIRED TO INSPECT THE PROJECT SITE IN ITS ENTIRETY PRIOR TO SUBMITTING THEIR BID, AND BECOME FAMILIAR WITH ALL CONDITIONS AS THEY MAY AFFECT THEIR BID. GENERAL CONTRACTOR AND SUB-CONTRACTOR(S) SHALL BE FAMILIAR WITH ALL DRAWINGS AND SPECIFICATIONS PRIOR TO COMMENCING THE WORK.
4. LOCATIONS OF ANY UTILITIES SHOWN ON THESE PLANS ARE APPROXIMATE ONLY. CONTRACTOR SHALL BE RESPONSIBLE FOR VERIFYING THE LOCATION OF SUCH UTILITIES, PROTECTING ALL EXISTING UTILITIES AND REPAIRING ANY DAMAGE DONE DURING CONSTRUCTION. THE CONTRACTOR SHALL BE RESPONSIBLE FOR ALL ON-SITE COORDINATION WITH UTILITY COMPANIES AND PUBLIC AGENCIES AND FOR OBTAINING ALL REQUIRED PERMITS AND PAYING ALL REQUIRED FEES. **IN ACCORDANCE WITH M.G.L. CHAPTER 82, SECTION 40, INCLUDING AMENDMENTS**, CONTRACTORS SHALL NOTIFY ALL UTILITY COMPANIES AND GOVERNMENT AGENCIES IN WRITING PRIOR TO EXCAVATION. CONTRACTOR SHALL ALSO CALL **"DIG SAFE" AT (888) 344-7233 NO LESS THAN 72 HOURS, (EXCLUSIVE OF WEEKENDS AND HOLIDAYS)**, PRIOR TO SUCH EXCAVATION. DOCUMENTATION OF REQUESTS SHALL BE PROVIDED TO PROJECT REPRESENTATIVE PRIOR TO EXCAVATION WORK.
5. ALL SURPLUS AND/OR UNSUITABLE MATERIAL FROM CONSTRUCTION ACTIVITIES SHALL BE MANAGED OF BY THE CONTRACTOR IN ACCORDANCE WITH **SPECIFICATION 02 61 00 - HANDLING AND OFF-SITE DISPOSAL OF EXCAVATED MATERIAL**. SUITABLE SOIL EXCAVATION AS PART OF THE PROJECT MUST MEET ONE OR MORE OF THE MATERIAL REQUIREMENTS SPECIFIED IN **31 00 00 - EARTHWORK**. ON-SITE FILL MATERIALS, WHICH DO NOT CONFORM TO **SECTION 31 00 00**, SHALL NOT BE USED BELOW ANY STRUCTURES.
6. THE LIMIT OF WORK SHALL BE DELINEATED IN THE FIELD BY THE CONTRACTOR PRIOR TO THE START OF SITE CLEARING OR CONSTRUCTION. CONTRACTOR IS RESPONSIBLE FOR LOCATING AND STAKING OUT ALL CONSTRUCTION BASELINES IN FIELD. THE CONTRACTOR IS RESPONSIBLE FOR ESTABLISHING SURVEY CONTROL POINTS AT THE SITE AS REQUIRED TO CONSTRUCT THE PROJECT TO THE LINES AND GRADES INDICATED ON THE DRAWINGS.
7. THE CONTRACTOR SHALL MAINTAIN EXISTING FENCING AND PROVIDE ADDITIONAL TEMPORARY CONSTRUCTION FENCING TO SECURE ACTIVE CONSTRUCTION AREAS TO PREVENT SITE ACCESS/TRESPASSING. THE CONTRACTOR SHALL KEEP AVAILABLE FOR ACCESS TO OWNER AND CHATHAM POLICE AND FIRE DEPARTMENTS AT ALL TIMES. CONTRACTOR SHALL COORDINATE GATE LOCKING WITH POLICE AND FIRE DEPARTMENTS AND PROVIDE KEYS AS NECESSARY. CONTRACTOR SHALL MAINTAIN CHAIN LINK FENCING, GATES AND WIND MESH ALONG THE PERIMETER OF THE CONSTRUCTION AREA THROUGHOUT THE DURATION OF THE PROJECT AND REPAIR IF DAMAGED. TEMPORARY FENCING SHALL NOT IMPEDE VEHICLE TRAVEL LANES.
8. WHERE AN EXISTING UTILITY IS FOUND TO CONFLICT WITH THE PROPOSED WORK, THE LOCATION, ELEVATION AND SIZE OF THE UTILITY SHALL BE ACCURATELY DETERMINED WITHOUT DELAY BY THE CONTRACTOR AND THE INFORMATION FURNISHED TO THE ENGINEER FOR RESOLUTION OF THE CONFLICT.
9. THE CONTRACTOR SHALL MAKE ALL ARRANGEMENTS FOR THE ALTERATION AND ADJUSTMENT OF GAS, ELECTRIC, TELEPHONE AND ANY OTHER PRIVATE UTILITIES BY THE UTILITY OWNER AT NO ADDITIONAL COST TO THE OWNER.
10. CONTRACTOR SHALL BE RESPONSIBLE FOR REVIEWING ALL DRAWINGS AND SPECIFICATIONS TO DETERMINE THE EXTENT OF EXCAVATION REQUIRED TO CONSTRUCT SITE IMPROVEMENTS.
11. ANY DISCREPANCIES OR CONFLICTS BETWEEN THE DRAWINGS AND EXISTING FIELD CONDITIONS, EXISTING CONDITIONS TO REMAIN, TEMPORARY CONSTRUCTION, PERMANENT CONSTRUCTION AND WORK OF ADJACENT CONTRACTS SHALL BE BROUGHT TO THE ATTENTION OF THE ENGINEER AND OWNER BEFORE PROCEEDING. ITEMS ENCOUNTERED IN AREAS OF EXCAVATION THAT ARE NOT INDICATED ON THE DRAWINGS, BUT ARE VISIBLE ON SURFACE, SHALL BE THE CONTRACTOR'S RESPONSIBILITY AND SHALL BE REMOVED AT NO ADDITIONAL COST TO THE OWNER.
12. ANY ALTERATIONS TO THESE DRAWINGS MADE IN THE FIELD DURING CONSTRUCTION SHALL BE RECORDED BY THE CONTRACTOR ON "AS-BUILT" DRAWINGS. THE CONTRACTOR SHALL SUBMIT TO THE ENGINEER AS-BUILT DRAWINGS PER SPECIFICATION SECTION 01 77 00 - PROJECT CLOSEOUT. THESE DRAWINGS SHALL INCLUDE THE FINAL GRADING ELEVATIONS, UTILITIES, AND ALL STRUCTURES LEFT IN PLACE OR INSTALLED.
13. ALL AREAS DISTURBED BY THE CONTRACTOR'S OPERATIONS OUTSIDE THE PROJECT LIMITS, SHALL BE RESTORED TO THE ORIGINAL CONDITION BY THE CONTRACTOR AT NO ADDITIONAL COST AND TO THE SATISFACTION OF THE OWNER.
14. THE CONTRACTOR SHALL TAKE ALL NECESSARY PRECAUTIONS TO PROTECT ITS EMPLOYEES, AS WELL AS PUBLIC USERS FROM INJURY DURING THE ENTIRE CONSTRUCTION PERIOD USING ALL NECESSARY SAFEGUARDS, INCLUDING BUT NOT LIMITED TO, THE ERECTION OF TEMPORARY WALKS, STRUCTURES, PROTECTIVE BARRIERS, COVERING, OR FENCES AS NEEDED.
15. THE CONTRACTOR SHALL SUPPLY THE OWNER WITH THE NAME OF THE OSHA "COMPETENT PERSON" PRIOR TO CONSTRUCTION.
16. CONTRACTOR SHALL COORDINATE ALL WORK WITH THE ENGINEER. FILLING OF EXCAVATED AREAS SHALL NOT TAKE PLACE WITHOUT THE PRESENCE OR PERMISSION OF THE ENGINEER.
17. NO FILL SHALL CONTAIN HAZARDOUS MATERIALS.
18. ANY QUANTITIES SHOWN ON PLANS ARE FOR COMPARATIVE BIDDING PURPOSES ONLY. IT IS THE CONTRACTOR'S RESPONSIBILITY TO VISIT THE PROJECT SITE TO VERIFY ALL QUANTITIES AND CONDITIONS PRIOR TO SUBMITTING BID.
19. CONTRACTOR'S STAGING AREA MUST BE WITHIN THE CONTRACT LIMIT LINE (LIMIT OF WORK AS IDENTIFIED ON THE PLANS).
20. ALL WORK, INCLUDING THE HAULING OF EARTH MATERIALS TO AND FROM THE SITE, SHALL BE RESTRICTED TO THE HOURS SPECIFIED IN THE LOCAL BYLAWS.
21. PRIOR TO PERFORMING ANY WORK WITHIN 50 FEET OF THE LANDFILL CAP, THE CONTRACTOR SHALL MARK OUT THE LIMIT OF LANDFILL CAP USING SPRAY PAINT, PIN FLAGS, OR OTHER MEANS APPROVED BY THE ENGINEER. APPROVED MARKERS SHALL NOT PENETRATE DEEPER THAN 6 INCHES BELOW GRADE TO PREVENT DAMAGE TO THE LANDFILL COVER SYSTEM.
22. THE CONTRACTOR SHALL CONDUCT WORK BETWEEN 7:00 A.M. AND 5:00 P.M., MONDAY THROUGH FRIDAY UNLESS OTHERWISE APPROVED BY THE OWNER.
23. THE CONTRACTOR SHALL PROVIDE TEMPORARY WATER TRUCKS OR COORDINATE WITH THE OWNER FOR USE OF HYDRANTS DURING CONSTRUCTION ACTIVITIES. THE CONTRACTOR SHALL PROVIDE NECESSARY HOSES, FITTINGS, BACKFLOW PREVENTER, AND METER TO USE EXISTING HYDRANT, OR PROVIDE WATER TRUCKS FOR DUST CONTROL, AT NO ADDITIONAL COST TO THE OWNER. REFER TO DRAWING C100 - EXISTING CONDITIONS SITE PLAN FOR THE LOCATIONS OF TWO EXISTING HYDRANTS ON SITE.
24. ALL OPEN EXCAVATIONS SHALL BE PROTECTED AT THE END OF EACH WORKING DAY USING BACKFILLING, FENCING, OR STEEL PLATING. THE COST OF SUCH MATERIALS SHALL BE CONSIDERED INCIDENTAL TO THE PROJECT.
25. THE CONTRACTOR IS PROHIBITED FROM OPERATING HEAVY MACHINERY ON THE LANDFILL CAP. ANY DAMAGE TO THE LANDFILL CAP RESULTING FROM THE CONTRACTOR'S OPERATIONS SHALL BE REPAIRED BY THE CONTRACTOR AT NO ADDITIONAL COST TO THE OWNER.
26. CONTRACTOR SHALL BE RESPONSIBLE FOR ALL SITE RELATED DUST CONTROL PER SPECIFICATION SECTION 01 56 16 - DUST CONTROL.
27. ALL MATERIAL HAULING VEHICLES SHALL BE COMPLETELY COVERED PRIOR TO LEAVING THE SITE. CONTRACTOR SHALL BE RESPONSIBLE FOR ALL WHEEL CLEANING OF ALL CONSTRUCTION VEHICLES PRIOR TO ENTERING EXISTING STREETS AND ROADWAYS.
28. ALL SOLID WASTE AND HAZARDOUS WASTE SHALL BE MANAGED IN ACCORDANCE WITH ALL APPLICABLE STATE AND FEDERAL REGULATIONS.
29. MISCELLANEOUS DISCREPANCIES OR OMISSIONS THAT MAY NOT APPEAR ON THE PLANS OR SPECIFICATIONS WILL NOT RELIEVE THE CONTRACTOR FROM CODE COMPLIANCE.
30. THE CONTRACTOR IS REQUIRED TO CONDUCT ALL WORK IN ACCORDANCE WITH THE TOWN OF CHATHAM NOISE ORDINANCES AND AS SPECIFIED IN THE CONTRACT DOCUMENTS.
31. EXISTING TRANSFER STATION TRAFFIC SHALL BE MAINTAINED THROUGHOUT THE PROJECT PER MUTCD REQUIREMENTS.

EROSION AND SEDIMENT CONTROL NOTES

1. THE CONTRACTOR SHALL PROVIDE AND MAINTAIN EROSION AND SEDIMENT CONTROLS (I.E. STRAW WATTLES) FOR THE DURATION OF THE PROJECT AS REQUIRED TO PREVENT TRANSPORT OF SEDIMENT-LADEN WATER FROM ACTIVE CONSTRUCTION AREAS. EROSION AND SEDIMENT CONTROL MEASURES SHALL BE FURNISHED, INSTALLED, MAINTAINED, AND REPLACED BY THE CONTRACTOR AS NEEDED.
2. VEHICLES LEAVING THE SITE SHALL NOT CARRY OUT MUD OR DIRT FROM THE SITE ON THE VEHICLE BODY OR WHEELS. CONTRACTOR IS RESPONSIBLE FOR CLEANING TRACKED DIRT/MUD/DEBRIS FROM PAVED SURFACES RESULTING FROM THEIR OPERATIONS.
3. CONTRACTOR SHALL STOCKPILE SURPLUS SOIL GENERATED DURING THE PROJECT ON POLYETHYLENE SHEETING AND COVERED BY THE SAME. STOCKPILES SHALL BE SURROUNDED WITH STRAW WATTLES TO PREVENT MIGRATION OF SEDIMENT FROM THE PILES. CONTRACTOR IS RESPONSIBLE FOR MAINTAINING POLYETHYLENE SHEETING AND REPLACING AS REQUIRED.
4. THE CONTRACTOR SHALL PROVIDE TEMPORARY STABILIZATION OF ALL BARE AND DISTURBED SLOPES, INCLUDING THE EMBANKMENT FILL SLOPES, WITH EROSION CONTROL BLANKETS PENDING ESTABLISHMENT OF PERMANENT GRASS COVER.
5. ALL EROSION CONTROLS SHALL BE REMOVED FROM THE SITE AT THE COMPLETION OF CONSTRUCTION.

DEMOLITION & SITE PREPARATION NOTES

1. THE CONTRACTOR SHALL INCLUDE IN THE BID THE COST OF REMOVING ANY EXISTING SITE FEATURES AND APPURTENANCES NECESSARY TO ACCOMPLISH THE CONSTRUCTION OF THE PROPOSED SITE IMPROVEMENTS. THE CONTRACTOR SHALL ALSO INCLUDE IN THE BID THE COST NECESSARY TO RESTORE SUCH ITEMS IF THEY ARE SCHEDULED TO REMAIN AS PART OF THE FINAL SITE IMPROVEMENTS. REFER TO PLANS TO DETERMINE EXCAVATION AND DEMOLITION REQUIREMENTS AND TO DETERMINE THE LOCATION OF THE PROPOSED SITE IMPROVEMENTS.
2. THE OWNER RESERVES THE RIGHT TO REVIEW ALL MATERIALS DESIGNATED FOR REMOVAL AND TO RETAIN OWNERSHIP OF SUCH MATERIALS. IF THE OWNER RETAINS ANY MATERIAL THE CONTRACTOR SHALL ALLOW ARRANGEMENTS WITH THE OWNER TO HAVE THOSE MATERIALS REMOVED OFF SITE AT NO ADDITIONAL COST.
3. DURING EARTHWORK OPERATIONS, CONTRACTOR SHALL TAKE CARE TO NOT DISTURB EXISTING MATERIALS TO REMAIN, OUTSIDE THE LIMITS OF EXCAVATION AND BACKFILL AND SHALL TAKE WHATEVER MEASURES NECESSARY, AT THE CONTRACTOR'S EXPENSE, TO PREVENT ANY EXCAVATED MATERIAL FROM COLLAPSING. ALL BACKFILL MATERIALS SHALL BE PLACED AND COMPACTED AS SPECIFIED TO THE SUBGRADE REQUIRED FOR THE INSTALLATION OF THE REMAINDER OF THE CONTRACT WORK.
4. IT SHALL BE THE CONTRACTOR'S OPTION, WITH CONCURRENCE OF THE OWNER AND THE ENGINEER, TO REUSE EXISTING GRAVEL IF IT MEETS THE REQUIREMENTS OF THE ASSOCIATED MATERIAL SPECIFIED IN **31 00 00 EARTHWORK**, AS DEMONSTRATED BY LABORATORY TEST(S).

LAYOUT & MATERIALS NOTES

1. THE STORAGE OF MATERIALS AND EQUIPMENT WILL BE PERMITTED AT LOCATIONS DESIGNATED BY OWNER OR OWNER'S REPRESENTATIVE. PROTECTION OF STORED MATERIALS AND EQUIPMENT SHALL BE THE SOLE RESPONSIBILITY OF THE CONTRACTOR.
2. COORDINATE ALL LAYOUT ACTIVITIES WITH THE SCOPE OF WORK CALLED FOR BY DEMOLITION, GRADING, AND UTILITIES OPERATIONS ENCOMPASSED BY THIS CONTRACT. SET, PROTECT AND REPLACE REFERENCE STAKES AS NECESSARY OR AS REQUIRED BY THE OWNER'S REPRESENTATIVE.
3. ALL WORK SHALL BE PERFORMED BY CONTRACTOR UNLESS SPECIFICALLY INDICATED THAT THE WORK WILL BE PERFORMED BY THE OWNER.
4. THE LAYOUT OF SITE AMENITIES AND FENCES MUST BE APPROVED BY THE OWNER'S REPRESENTATIVE PRIOR TO INSTALLATION.
5. THE LAYOUT OF ALL NEW PATHWAYS / WALKWAYS AND THE GRADING OF ALL SLOPES AND CROSS SLOPES SHALL CONFORM TO THE COMMONWEALTH OF MASSACHUSETTS RULES AND REGULATIONS FOR HANDICAP ACCESS CMR 521, AND THE AMERICANS WITH DISABILITIES ACT (ADA), TITLE 3. THE CONTRACTOR SHALL NOTIFY THE OWNER IMMEDIATELY OF ANY DISCREPANCIES BETWEEN ACTUAL CONDITIONS AND THOSE REQUIRED.
6. ALL LAYOUT LINES, OFFSETS, OR REFERENCES TO LOCATING OBJECTS ARE EITHER PARALLEL OR PERPENDICULAR UNLESS OTHERWISE DESIGNATED WITH ANGLE OFFSETS NOTED.
7. ALL PROPOSED SITE FEATURES SHALL BE LAID OUT AND STAKED BY THE LICENSED SURVEYOR FOR REVIEW AND APPROVAL BY THE ENGINEER PRIOR TO COMMENCEMENT OF INSTALLATION. ANY REQUIRED ADJUSTMENTS TO THE LAYOUT SHALL BE UNDERTAKEN AS REQUIRED, AT NO ADDITIONAL COST TO THE OWNER.
8. ALL PROPOSED PAVEMENTS SHALL MEET THE LINE AND GRADE OF EXISTING ADJACENT PAVEMENT SURFACES AND SHALL BE TREATED WITH AN RS-1 TACK COAT AT POINT OF CONNECTION. ALL PATHWAY WIDTHS SHALL BE AS NOTED ON THE LAYOUT AND MATERIALS PLAN.
9. THE CONTRACTOR SHALL VERIFY ALL DIMENSIONS AND GRADES ON THE GROUND AND REPORT ANY DISCREPANCIES IMMEDIATELY TO THE ENGINEER.
10. THE CONTRACTOR SHALL BE RESPONSIBLE FOR FIELD MEASUREMENT OF ALL PROPOSED FENCES AND GATES.
11. ALL REFERENCES TO LOAM AND SEED (L&S) REFER TO HYDROMULCH SEEDED LAWN, UNLESS NOTED OTHERWISE.

GRADING, UTILITIES & DRAINAGE NOTES

1. WORK RELATING TO THE INSTALLATION OR MODIFICATION OF WATER, DRAINAGE, AND/OR SEWER UTILITIES SHALL BE PERFORMED IN ACCORDANCE WITH THE MUNICIPALITY'S STANDARDS.
2. ALL GRADING IS TO BE SMOOTH AND CONTINUOUS WHERE PROPOSED SURFACE MEETS EXISTING SURFACE. BLEND THE TWO PAVEMENTS AND ELIMINATE ROUGH SPOTS AND ABRUPT GRADE CHANGES AND MEET LINE AND GRADE OF EXISTING CONDITIONS WITH NEW IMPROVEMENTS.
3. CONTRACTOR SHALL MAINTAIN POSITIVE DRAINAGE (1.25% MINIMUM) AWAY FROM ALL BUILDING FOUNDATIONS AND STRUCTURES.
4. CONTRACTOR SHALL ENSURE ALL AREAS ARE PROPERLY PITCHED TO DRAIN, WITH NO SURFACE WATER PONDING OR PUDDLING.
5. ALL NEW WALKWAYS / ACCESS PATHS MUST CONFORM TO CURRENT AMERICANS WITH DISABILITIES ACT (ADA) REGULATIONS. WALKWAYS SHALL MAINTAIN A CROSS PITCH OF NOT MORE THAN TWO PERCENT (2%) AND THE RUNNING SLOPE (PARALLEL TO THE DIRECTION OF TRAVEL) BETWEEN 1% MIN. AND 5% MAX.
6. MINIMUM SLOPE ON ALL WALKWAYS WILL BE 1.25% TO PROVIDE POSITIVE DRAINAGE. ANY DISCREPANCIES NOT ALLOWING THIS TO OCCUR SHALL BE REPORTED TO THE OWNER PRIOR TO CONTINUING WORK.
7. ALL UTILITY GRATES, COVERS OR OTHER SURFACE ELEMENTS INTENDED TO BE EXPOSED AT GRADE SHALL BE FLUSH WITH THE ADJACENT FINISHED GRADE AND ADJUSTED TO PROVIDE A SMOOTH TRANSITION AT ALL EDGES IN ACCORDANCE WITH STATE STANDARD SPECIFICATIONS.
8. THE CONTRACTOR SHALL SET SUBGRADE ELEVATIONS TO ALLOW FOR POSITIVE DRAINAGE AND PROVIDE EROSION CONTROL DEVICES, STRUCTURES, MATERIALS AND CONSTRUCTION METHODS TO DIRECT SILT MIGRATION AWAY FROM DRAINAGE AND OTHER UTILITY SYSTEMS, PUBLIC/PRIVATE STREETS AND WORK AREAS. CLEAN BASINS REGULARLY AND AT THE END OF THE PROJECT.
9. EXCAVATION REQUIRED WITHIN PROXIMITY OF KNOWN EXISTING UTILITY LINES SHALL BE DONE BY HAND. CONTRACTOR SHALL REPAIR ANY DAMAGE TO EXISTING UTILITY LINES OR STRUCTURES INCURRED DURING CONSTRUCTION OPERATIONS AT NO COST TO THE OWNER.
10. WHERE A SPECIFIC LIMIT OF WORK LINE IS NOT OBVIOUS OR IMPLIED, BLEND GRADES TO EXISTING CONDITIONS WITHIN 5 FEET OF PROPOSED CONTOURS.
11. RESTORE ALL DISTURBED AREAS AND LIMITS OF ALL REMOVALS TO LOAM AND SEED (L&S) UNLESS OTHERWISE NOTED.

ABBREVIATIONS:

AC	ASBESTOS CEMENT PIPE
ACCMP	ASPHALT COATED CORRUGATED METAL PIPE
ARV	AIR RELEASE VALVE
ASTM	AMERICAN SOCIETY FOR TESTING AND MATERIALS
BC	BITUMINOUS CONCRETE
BIT	BITUMINOUS
BLDG	BUILDING
BM	BENCH MARK
BO	BLOW OFF
BV	BUTTERFLY VALVE
CATV	CABLE TELEVISION
CB	CATCH BASIN
CC	CONCRETE CURB
CI	CAST IRON
℄	CENTERLINE
CL	CEMENT LINED OR CENTERLINE
CMP	CORRUGATED METAL PIPE
CONC	CONCRETE
CU FT	CUBIC FEET
CY	CUBIC YARD
D	STORM DRAIN, DEPTH FROM RIM TO INVERT
DI	DUCTILE IRON
DIA	DIAMETER
DMH	DRAIN MANHOLE
DWG	DRAWING
E	EAST, ELECTRIC
EA	EACH
EF	EACH FACE
ELEV	ELEVATION
EOP	EDGE OF PAVEMENT
EW	EACH WAY
EXIST	EXISTING
FLG	FLANGE
FT	FEET, FOOT
G	NATURAL GAS
GALV	GALVANIZED
GC	GRANITE CURB
GR	GRANITE
HC	HOUSE CONNECTION
HORIZ	HORIZONTAL
HP	HIGH PRESSURE
HYD	FIRE HYDRANT
I OR INV	INVERT
ID	INSIDE DIAMETER
IP	IRON PIPE
LB	POUND
LF	LINEAR FEET
LS	LUMP SUM
MAX	MAXIMUM
MB	MAIL BOX
MDC	METROPOLITAN DISTRICT COMMISSION
MDOT	MASSACHUSETTS DEPARTMENT OF TRANSPORTATION
MECH	MECHANICAL
MH	MANHOLE
MHD	MASSACHUSETTS HIGHWAY DEPARTMENT
MIN	MINIMUM
MISC	MISCELLANEOUS
MJ	MECHANICAL JOINT
MWRA	MASSACHUSETTS WATER RESOURCES AUTHORITY
N	NORTH
NE	NORTH EAST
NW	NORTH WEST
NF	NOT FOUND
NO OR #	NUMBER
OD	OUTSIDE DIAMETER
PCCP	PRESTRESSED CONCRETE CYLINDER PIPE
PE	PLAIN END, POLYETHYLENE
⅊	PROPERTY LINE
PL	PLATE
PVC	POLYVINYL CHLORIDE
PVMT	PAVEMENT
RCP	REINFORCED CONCRETE PIPE
ROW	RIGHT-OF-WAY
RT	RADIO TOWER
RQD	ROCK QUALITY
S	SEWER, SOUTH, SILL ELEVATION
SE	SOUTH EAST
SECT	SECTION
SF	SQUARE FEET
SHT	SHEET
SPEC	SPECIFICATIONS
SPS	SEWAGE PUMP STATION
SQ FT	SQUARE FEET
SS	SEWER SERVICE, STAINLESS STEEL
STA	STATION
STL	STEEL
SW	SIDEWALK, SOUTH WEST
T	HYDROSTATIC THRUST, TELEPHONE
TBM	TEMPORARY BENCH MARK
THK	THICK (NESS)
TYP	TYPICAL
UP	UTILITY POLE
VC	VITRIFIED CLAY
VERT	VERTICAL
W	WATER, WEST
W/	WITH
W/O	WITHOUT

LEGEND: PROPOSED FEATURES

REFER TO THE EXISTING CONDITIONS PLAN FOR A LEGEND OF EXISTING FEATURES

- 50 — ELEVATION CONTOUR
- 42.75 — SPOT GRADE
- LIMIT OF WORK
- CURBING (TYPE SPECIFIED ON PLANS)
- HDPE STORM DRAIN PIPING
- CATCH BASIN
- D — DRAIN MANHOLE
- S — SEWER PIPE (CLASS 150 PRESSURE PIPE)
- S — SEWER MANHOLE
- CO — SEWER CLEANOUT
- 8"W DI (PE ENCASED) — WATER LINE
- HYDRANT OR YARD HYDRANT
- GATE VALVE OR CURB STOP
- REDUCER
- CUT/CUP LOCATION
- MODULAR BLOCK RETAINING WALL
- GRAVEL SURFACE AREA
- CONCRETE SIDEWALK
- CONCRETE PAD
- LOAM AND SEED AREA
- REINFORCED SOIL MAT
- METAL HAND RAIL
- WOODEN GUARD RAIL
- PERMANENT 6-FOOT CHAIN LINK FENCE
- SIGNAGE
- BOLLARD
- TEMPORARY CONSTRUCTION FENCE
- MONITORING WELL TO BE PROTECTED
- MONITORING WELL TO BE REMOVED
- TEST PIT
- STRAW WATTLES
- RIPRAP
- NEW BUILDING
- SHADE TREE
- 1 — CONSTRUCTION REVISION

Project:
TOWN OF CHATHAM
TRANSFER STATION
REDEVELOPMENT PROJECT
97 SAM RYDER ROAD, CHATHAM MA

TOWN OF CHATHAM INCORPORATED JUNE 11 1712 MASS.

Weston & Sampson
Weston & Sampson Engineers, Inc.
55 Walkers Brook Drive, Suite 100
Reading, MA 01867
978.532.1900 800.SAMPSON
www.westonandsampson.com

Consultants:

Revisions:

No.	Date	Description

COA:

Seal: COMMONWEALTH OF MASSACHUSETTS BRIAN J McCORMACK ENVIRONMENTAL No. 47895 REGISTERED PROFESSIONAL ENGINEER

Issued For:
BIDDING

Scale: NONE

Date:	MARCH 13, 2026
Drawn By:	NWA/AS
Reviewed By:	BJM
Approved By:	BJM
W&S Project No.:	ENG25-1356
W&S File No.:	-

Drawing Title:
GENERAL NOTES AND LEGEND

Sheet Number:
G001

COPYRIGHT © 2026 WESTON & SAMPSON, INC.

P:\ML\Chatham MA\25-1356 - Transfer Station Redevelopment\ENGINEERING\CAD\C-Civil\70 - Sheets\G001 - NOTES AND LEGEND.dwg

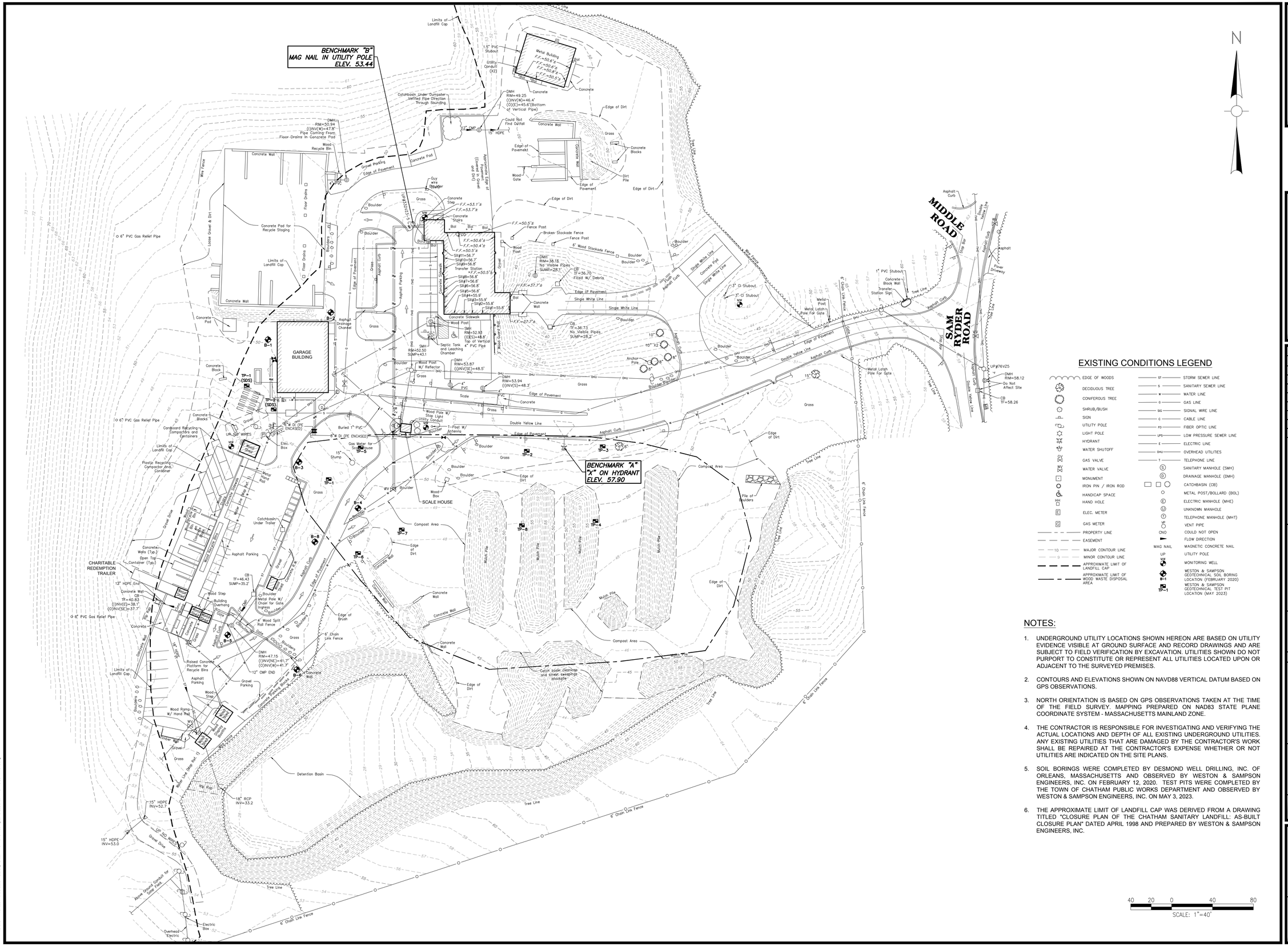
BENCHMARK "B"
MAG NAIL IN UTILITY POLE
ELEV. 53.44
BENCHMARK "A"
"X" ON HYDRANT
ELEV. 57.90
GARAGE BUILDING
SCALE HOUSE
CHARITABLE REDEMPTION TRAILER
MIDDLE ROAD
SAM RYDER ROAD
Metal Building
Concrete Wall
Concrete Pad
Gravel Parking
Asphalt Parking
Asphalt Drainage Channel
Septic Tank and Leaching Chamber
Compost Area
Mulch Pile
Pile of Boulders
Catch basin cleanings and street sweepings stockpile
Detention Basin
Tree Line
6' Chain Link Fence
Wire Fence
Limits of Landfill Cap
Edge of Pavement
Edge of Dirt
Single White Line
Double Yellow Line
Asphalt Curb
Grass
Boulder
Concrete Block
Wood Box
Wood Post
Wood Step
Wood Ramp W/ Hand Rail
Raised Concrete Platform for Recycle Bins
Concrete Walls (Typ.)
Open Top Container (Typ.)
Cardboard Recycling Compactors and Containers
Plastic Recycling Compactor Amp. Container
Concrete Block Wall
Transfer Station Sign
Metal Post
Metal Latch Pole For Gate
Metal Post/Bollard (BOL)
Electric Box
Overhead Electric
Above Ground Conduit for Solar Cable
Gravel Drive
Asphalt Curb
Asphalt Drive
Power Driveway
Double Yellow Line
Tree Line
Edge of Brush
Concrete Wall
Compost Area
Catchbasin Under Trailer
Catchbasin Under Dumpster Verified Pipe Direction Through Sounding
Pipe Coming From Floor Drains In Concrete Pad
Concrete Pad for Recycle Staging
Loose Gravel & Dirt
Floor Drains
Wood Recycle Bin
Concrete Blocks
Dirt Pile
Wood Gate
Concrete Step
Concrete Stairs
Fence Post
Broken Stockade Fence
6' Wood Stockade Fence
Wood Post
Concrete Sidewalk
Wood Post W/ Reflector
Wood Post W/ Stop Light Utility Conduit
T-Post W/ Antenna
Wood Pole W/ Chain for Gate Ingress
Wood Step
Building Overhang
4' Wood Split Rail Fence
Wood Ramp W/ Hand Rail
Timber Wall
Concrete Block Retaining Wall
Anchor Pole
Metal Pole W/ Chain for Gate Ingress
Metal Latch Pole For Gate
Concrete Block Wall
Transfer Station Sign
Do Not Affect Site
Could Not Find Outfall
Approximate Edge of Pavement (Concrete Pad)
Concrete Sidewalk
Wood Guard Rail
Wire Fence
Tree Line
6' Chain Link Fence
Gate
Edge of Brush
Edge of Dirt
Compost Area
Pile of Boulders
Catch basin cleanings and street sweepings stockpile
Detention Basin
Tree Line
6' Chain Link Fence
Tree Line
6' Chain Link Fence
Tree Line
6' Chain Link Fence

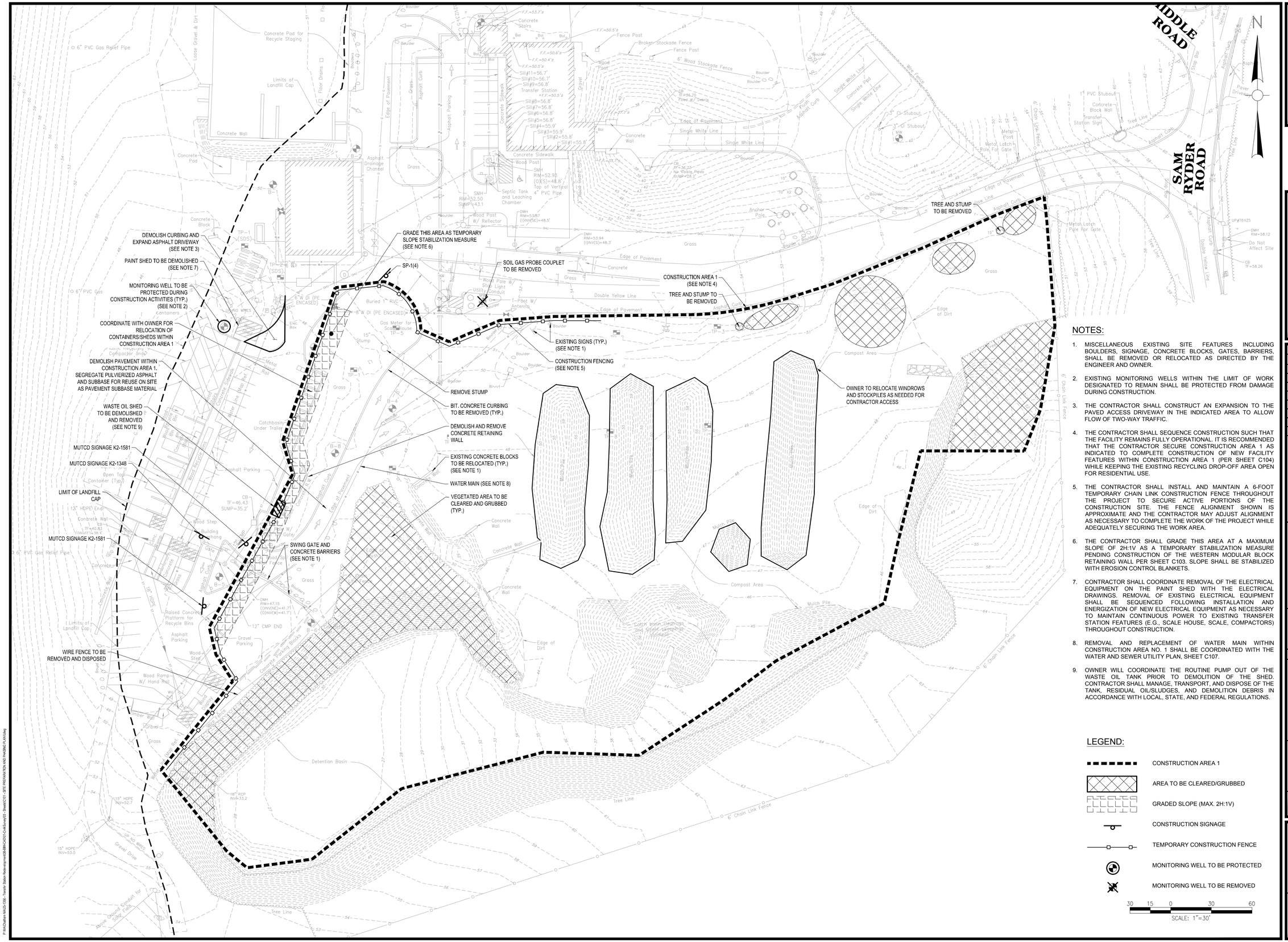

NOTES:

1. MISCELLANEOUS EXISTING SITE FEATURES INCLUDING BOULDERS, SIGNAGE, CONCRETE BLOCKS, GATES, BARRIERS, SHALL BE REMOVED OR RELOCATED AS DIRECTED BY THE ENGINEER AND OWNER.
2. EXISTING MONITORING WELLS WITHIN THE LIMIT OF WORK DESIGNATED TO REMAIN SHALL BE PROTECTED FROM DAMAGE DURING CONSTRUCTION.
3. THE CONTRACTOR SHALL CONSTRUCT AN EXPANSION TO THE PAVED ACCESS DRIVEWAY IN THE INDICATED AREA TO ALLOW FLOW OF TWO-WAY TRAFFIC.
4. THE CONTRACTOR SHALL SHALL SEQUENCE CONSTRUCTION SUCH THAT THE FACILITY REMAINS FULLY OPERATIONAL. IT IS RECOMMENDED THAT THE CONTRACTOR SECURE CONSTRUCTION AREA 1 AS INDICATED TO COMPLETE CONSTRUCTION OF NEW FACILITY FEATURES WITHIN CONSTRUCTION AREA 1 (PER SHEET C104) WHILE KEEPING THE EXISTING RECYCLING DROP-OFF AREA OPEN FOR RESIDENTIAL USE.
5. THE CONTRACTOR SHALL INSTALL AND MAINTAIN A 6-FOOT TEMPORARY CHAIN LINK CONSTRUCTION FENCE THROUGHOUT THE PROJECT TO SECURE ACTIVE PORTIONS OF THE CONSTRUCTION SITE. THE FENCE ALIGNMENT SHOWN IS APPROXIMATE AND THE CONTRACTOR MAY ADJUST ALIGNMENT AS NECESSARY TO COMPLETE THE WORK OF THE PROJECT WHILE ADEQUATELY SECURING THE WORK AREA.
6. THE CONTRACTOR SHALL GRADE THIS AREA AT A MAXIMUM SLOPE OF 2H:1V AS A TEMPORARY STABILIZATION MEASURE PENDING CONSTRUCTION OF THE WESTERN MODULAR BLOCK RETAINING WALL PER SHEET C103. SLOPE SHALL BE STABILIZED WITH EROSION CONTROL BLANKETS.
7. CONTRACTOR SHALL COORDINATE REMOVAL OF THE ELECTRICAL EQUIPMENT ON THE PAINT SHED WITH THE ELECTRICAL DRAWINGS. REMOVAL OF EXISTING ELECTRICAL EQUIPMENT SHALL BE SEQUENCED FOLLOWING INSTALLATION AND ENERGIZATION OF NEW ELECTRICAL EQUIPMENT AS NECESSARY TO MAINTAIN CONTINUOUS POWER TO EXISTING TRANSFER STATION FEATURES (E.G., SCALE HOUSE, SCALE, COMPACTORS) THROUGHOUT CONSTRUCTION.
8. REMOVAL AND REPLACEMENT OF WATER MAIN WITHIN CONSTRUCTION AREA NO. 1 SHALL BE COORDINATED WITH THE WATER AND SEWER UTILITY PLAN, SHEET C107.
9. OWNER WILL COORDINATE THE ROUTINE PUMP OUT OF THE WASTE OIL TANK PRIOR TO DEMOLITION OF THE SHED. CONTRACTOR SHALL MANAGE, TRANSPORT, AND DISPOSE OF THE TANK. RESIDUAL OIL/SLUDGES, AND DEMOLITION DEBRIS IN ACCORDANCE WITH LOCAL, STATE, AND FEDERAL REGULATIONS.

LEGEND:

- CONSTRUCTION AREA 1
- AREA TO BE CLEARED/GRUBBED
- GRADED SLOPE (MAX. 2H:1V)
- CONSTRUCTION SIGNAGE
- TEMPORARY CONSTRUCTION FENCE
- MONITORING WELL TO BE PROTECTED
- MONITORING WELL TO BE REMOVED

30 15 0 30 60
SCALE: 1"=30'

Project:
TOWN OF CHATHAM
TRANSFER STATION
REDEVELOPMENT PROJECT
97 SAM RYDER ROAD, CHATHAM MA

TOWN OF CHATHAM INCORPORATED JUNE 11 1712 MASS.

Weston & Sampson
Weston & Sampson Engineers, Inc.
55 Walkers Brook Drive, Suite 100
Reading, MA 01867
978.532.1900 800.SAMPSON
www.westonandsampson.com

Consultants:

Revisions:

No.	Date	Description

COA:

Seal:
COMMONWEALTH OF MASSACHUSETTS
BRIAN J McCORMACK
ENVIRONMENTAL
No. 47895
REGISTERED PROFESSIONAL ENGINEER

Issued For:
BIDDING

Scale: 1" = 30'

Date: MARCH 13, 2026
Drawn By: NWA/AS
Reviewed By: BJM
Approved By: BJM
W&S Project No.: ENG25-1356
W&S File No.: -

Drawing Title:
SITE PREPARATION AND PHASING PLAN I

Sheet Number:
C101

COPYRIGHT © 2026 WESTON & SAMPSON, INC.

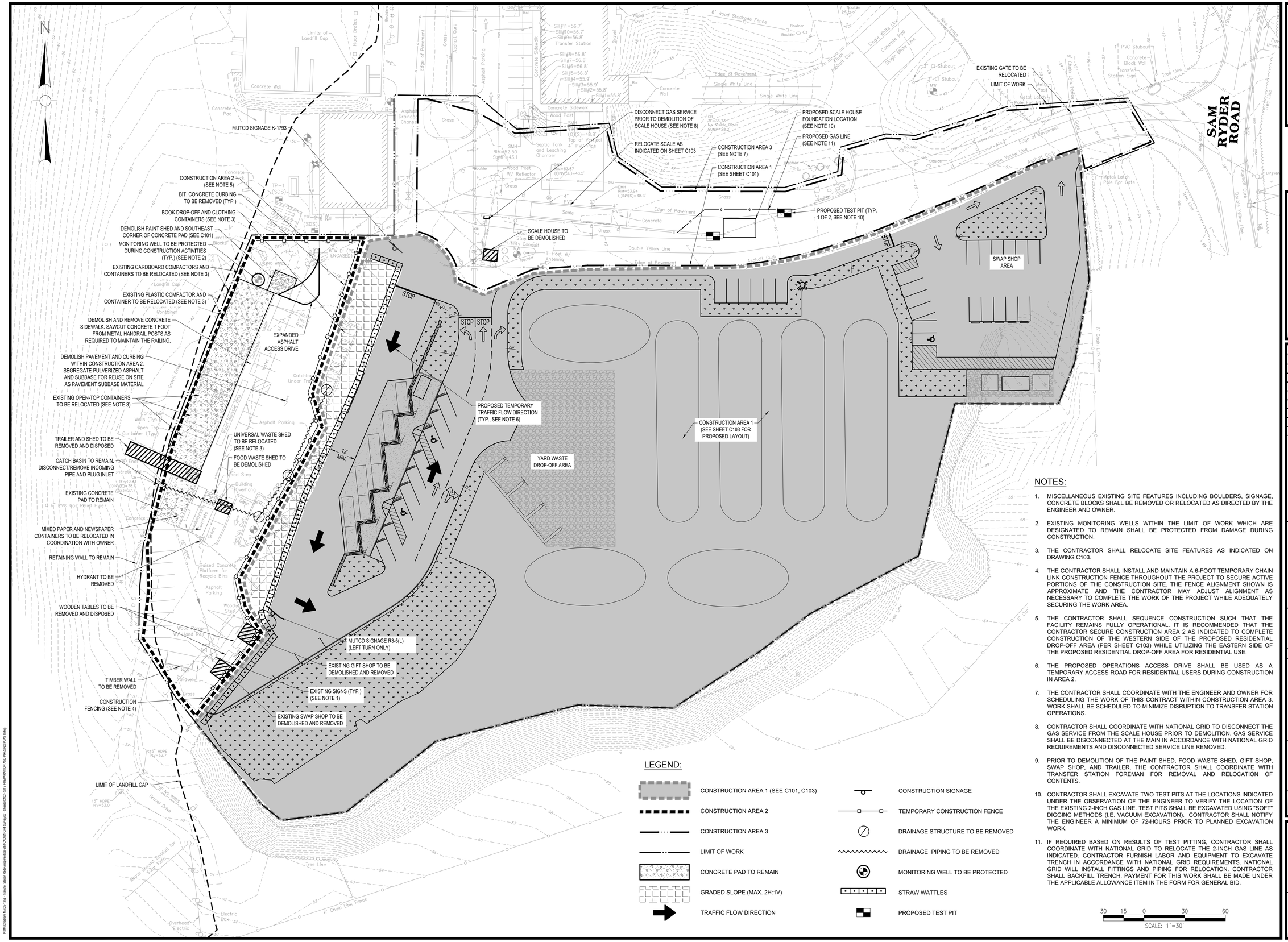

LEGEND:

- CONSTRUCTION AREA 1 (SEE C101, C103)
- CONSTRUCTION AREA 2
- CONSTRUCTION AREA 3
- LIMIT OF WORK
- CONCRETE PAD TO REMAIN
- GRADED SLOPE (MAX. 2H:1V)
- TRAFFIC FLOW DIRECTION
- CONSTRUCTION SIGNAGE
- TEMPORARY CONSTRUCTION FENCE
- DRAINAGE STRUCTURE TO BE REMOVED
- DRAINAGE PIPING TO BE REMOVED
- MONITORING WELL TO BE PROTECTED
- STRAW WATTLES
- PROPOSED TEST PIT

NOTES:

1. MISCELLANEOUS EXISTING SITE FEATURES INCLUDING BOULDERS, SIGNAGE, CONCRETE BLOCKS SHALL BE REMOVED OR RELOCATED AS DIRECTED BY THE ENGINEER AND OWNER.
2. EXISTING MONITORING WELLS WITHIN THE LIMIT OF WORK WHICH ARE DESIGNATED TO REMAIN SHALL BE PROTECTED FROM DAMAGE DURING CONSTRUCTION.
3. THE CONTRACTOR SHALL RELOCATE SITE FEATURES AS INDICATED ON DRAWING C103.
4. THE CONTRACTOR SHALL INSTALL AND MAINTAIN A 6-FOOT TEMPORARY CHAIN LINK CONSTRUCTION FENCE THROUGHOUT THE PROJECT TO SECURE ACTIVE PORTIONS OF THE CONSTRUCTION SITE. THE FENCE ALIGNMENT SHOWN IS APPROXIMATE AND THE CONTRACTOR MAY ADJUST ALIGNMENT AS NECESSARY TO COMPLETE THE WORK OF THE PROJECT WHILE ADEQUATELY SECURING THE WORK AREA.
5. THE CONTRACTOR SHALL SEQUENCE CONSTRUCTION SUCH THAT THE FACILITY REMAINS FULLY OPERATIONAL. IT IS RECOMMENDED THAT THE CONTRACTOR SECURE CONSTRUCTION AREA 2 AS INDICATED TO COMPLETE CONSTRUCTION OF THE WESTERN SIDE OF THE PROPOSED RESIDENTIAL DROP-OFF AREA (PER SHEET C103) WHILE UTILIZING THE EASTERN SIDE OF THE PROPOSED RESIDENTIAL DROP-OFF AREA FOR RESIDENTIAL USE.
6. THE PROPOSED OPERATIONS ACCESS DRIVE SHALL BE USED AS A TEMPORARY ACCESS ROAD FOR RESIDENTIAL USERS DURING CONSTRUCTION IN AREA 2.
7. THE CONTRACTOR SHALL COORDINATE WITH THE ENGINEER AND OWNER FOR SCHEDULING THE WORK OF THIS CONTRACT WITHIN CONSTRUCTION AREA 3. WORK SHALL BE SCHEDULED TO MINIMIZE DISRUPTION TO TRANSFER STATION OPERATIONS.
8. CONTRACTOR SHALL COORDINATE WITH NATIONAL GRID TO DISCONNECT THE GAS SERVICE FROM THE SCALE HOUSE PRIOR TO DEMOLITION. GAS SERVICE SHALL BE DISCONNECTED AT THE MAIN IN ACCORDANCE WITH NATIONAL GRID REQUIREMENTS AND DISCONNECTED SERVICE LINE REMOVED.
9. PRIOR TO DEMOLITION OF THE PAINT SHED, FOOD WASTE SHED, GIFT SHOP, SWAP SHOP, AND TRAILER, THE CONTRACTOR SHALL COORDINATE WITH TRANSFER STATION FOREMAN FOR REMOVAL AND RELOCATION OF CONTENTS.
10. CONTRACTOR SHALL EXCAVATE TWO TEST PITS AT THE LOCATIONS INDICATED UNDER THE OBSERVATION OF THE ENGINEER TO VERIFY THE LOCATION OF THE EXISTING 2-INCH GAS LINE. TEST PITS SHALL BE EXCAVATED USING "SOFT" DIGGING METHODS (I.E. VACUUM EXCAVATION). CONTRACTOR SHALL NOTIFY THE ENGINEER A MINIMUM OF 72-HOURS PRIOR TO PLANNED EXCAVATION WORK.
11. IF REQUIRED BASED ON RESULTS OF TEST PITTING, CONTRACTOR SHALL COORDINATE WITH NATIONAL GRID TO RELOCATE THE 2-INCH GAS LINE AS INDICATED. CONTRACTOR FURNISH LABOR AND EQUIPMENT TO EXCAVATE TRENCH IN ACCORDANCE WITH NATIONAL GRID REQUIREMENTS. NATIONAL GRID WILL INSTALL FITTINGS AND PIPING FOR RELOCATION. CONTRACTOR SHALL BACKFILL TRENCH. PAYMENT FOR THIS WORK SHALL BE MADE UNDER THE APPLICABLE ALLOWANCE ITEM IN THE FORM FOR GENERAL BID.

30 15 0 30 60
SCALE: 1"=30'

Project:
TOWN OF CHATHAM
TRANSFER STATION
REDEVELOPMENT PROJECT
97 SAM RYDER ROAD, CHATHAM MA

TOWN OF CHATHAM INCORPORATED JUNE 11 1712 MASS.

Weston & Sampson
Weston & Sampson Engineers, Inc.
55 Walkers Brook Drive, Suite 100
Reading, MA 01867
978.532.1900 800.SAMPSON
www.westonandsampson.com

Consultants:

Revisions:

No.	Date	Description

COA:

Seal:
COMMONWEALTH OF MASSACHUSETTS
BRIAN J McCORMACK
ENVIRONMENTAL
No. 47895
REGISTERED PROFESSIONAL ENGINEER

Issued For:
BIDDING

Scale: 1" = 30'

Date:	MARCH 13, 2026
Drawn By:	NWA/AS
Reviewed By:	BJM
Approved By:	BJM
W&S Project No.:	ENG25-1356
W&S File No.:	-

Drawing Title:
SITE PREPARATION AND PHASING PLAN II

Sheet Number:
C102

COPYRIGHT © 2026 WESTON & SAMPSON, INC.

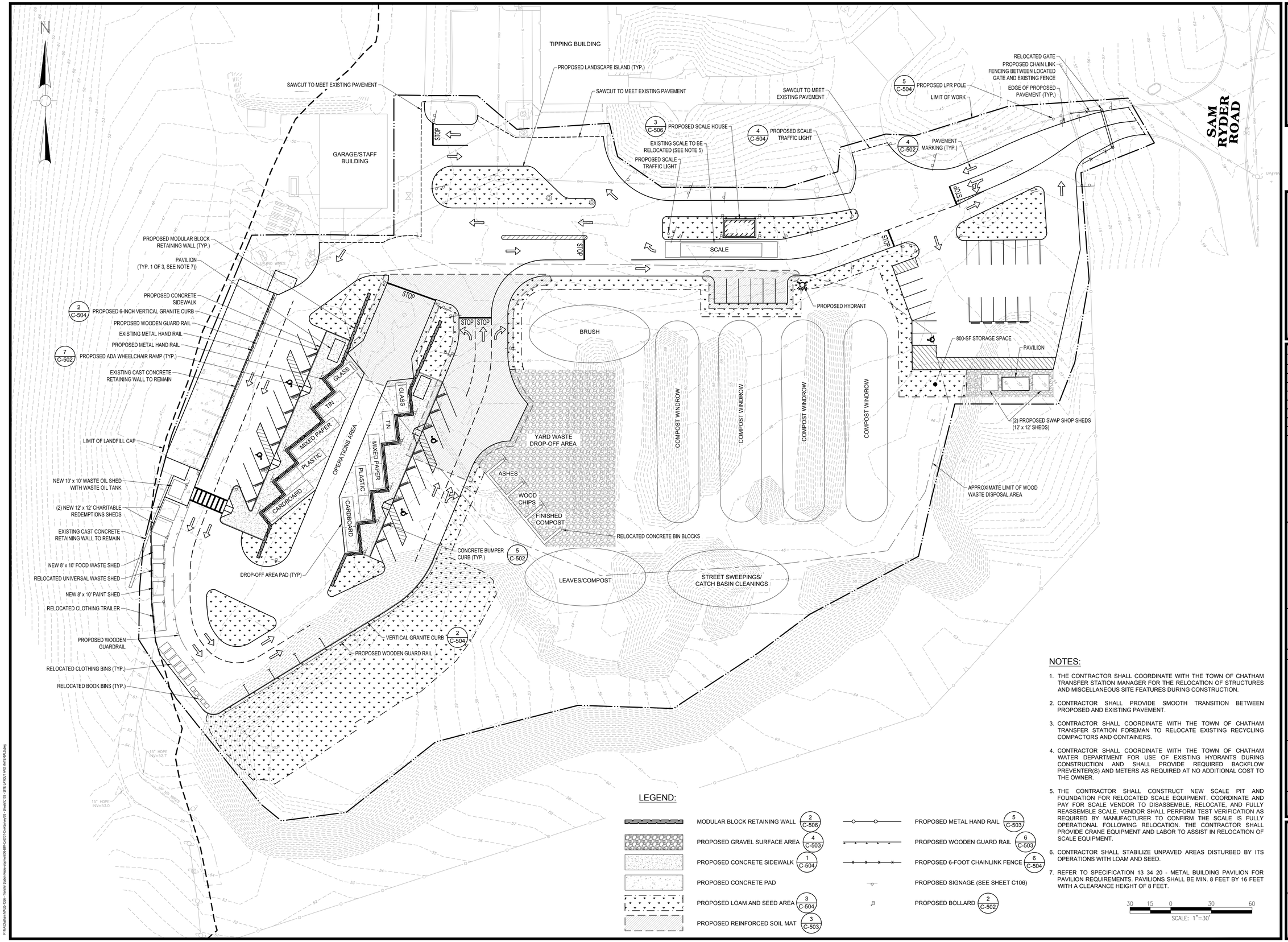

NOTES:

1. THE CONTRACTOR SHALL COORDINATE WITH THE TOWN OF CHATHAM TRANSFER STATION MANAGER FOR THE RELOCATION OF STRUCTURES AND MISCELLANEOUS SITE FEATURES DURING CONSTRUCTION.
2. CONTRACTOR SHALL PROVIDE SMOOTH TRANSITION BETWEEN PROPOSED AND EXISTING PAVEMENT.
3. CONTRACTOR SHALL COORDINATE WITH THE TOWN OF CHATHAM TRANSFER STATION FOREMAN TO RELOCATE EXISTING RECYCLING COMPACTORS AND CONTAINERS.
4. CONTRACTOR SHALL COORDINATE WITH THE TOWN OF CHATHAM WATER DEPARTMENT FOR USE OF EXISTING HYDRANTS DURING CONSTRUCTION AND SHALL PROVIDE REQUIRED BACKFLOW PREVENTER(S) AND METERS AS REQUIRED AT NO ADDITIONAL COST TO THE OWNER.
5. THE CONTRACTOR SHALL CONSTRUCT NEW SCALE PIT AND FOUNDATION FOR RELOCATED SCALE EQUIPMENT. COORDINATE AND PAY FOR SCALE VENDOR TO DISASSEMBLE, RELOCATE, AND FULLY REASSEMBLE SCALE. VENDOR SHALL PERFORM TEST VERIFICATION AS REQUIRED BY MANUFACTURER TO CONFIRM THE SCALE IS FULLY OPERATIONAL FOLLOWING RELOCATION. THE CONTRACTOR SHALL PROVIDE CRANE EQUIPMENT AND LABOR TO ASSIST IN RELOCATION OF SCALE EQUIPMENT.
6. CONTRACTOR SHALL STABILIZE UNPAVED AREAS DISTURBED BY ITS OPERATIONS WITH LOAM AND SEED.
7. REFER TO SPECIFICATION 13 34 20 - METAL BUILDING PAVILION FOR PAVILION REQUIREMENTS. PAVILIONS SHALL BE MIN. 8 FEET BY 16 FEET WITH A CLEARANCE HEIGHT OF 8 FEET.

LEGEND:

MODULAR BLOCK RETAINING WALL	2 C-506
PROPOSED GRAVEL SURFACE AREA	4 C-503
PROPOSED CONCRETE SIDEWALK	1 C-504
PROPOSED CONCRETE PAD	
PROPOSED LOAM AND SEED AREA	3 C-504
PROPOSED REINFORCED SOIL MAT	3 C-503
PROPOSED METAL HAND RAIL	5 C-503
PROPOSED WOODEN GUARD RAIL	6 C-503
PROPOSED 6-FOOT CHAINLINK FENCE	6 C-504
PROPOSED SIGNAGE (SEE SHEET C106)	
PROPOSED BOLLARD	2 C-502

30 15 0 30 60
SCALE: 1"=30'

Project:
TOWN OF CHATHAM
TRANSFER STATION
REDEVELOPMENT PROJECT
97 SAM RYDER ROAD, CHATHAM MA

TOWN OF CHATHAM INCORPORATED JUNE 11 1712 MASS.

Weston & Sampson
Weston & Sampson Engineers, Inc.
55 Walkers Brook Drive, Suite 100
Reading, MA 01867
978.532.1900 800.SAMPSON
www.westonandsampson.com

Consultants:

Revisions:

No.	Date	Description

COA:

Seal: COMMONWEALTH OF MASSACHUSETTS BRIAN J McCORMACK ENVIRONMENTAL No. 47895 REGISTERED PROFESSIONAL ENGINEER

Issued For:
BIDDING

Scale: 1" = 30'

Date:	MARCH 13, 2026
Drawn By:	NWA/AS
Reviewed By:	BJM
Approved By:	BJM
W&S Project No.:	ENG25-1356
W&S File No.:	-

Drawing Title:
SITE LAYOUT AND MATERIALS PLAN

Sheet Number:
C103

COPYRIGHT © 2026 WESTON & SAMPSON, INC.

P:\MA\Chatham MA\25-1356 - Transfer Station Redevelopment\DWG\CAD\Civil\Sheet\C103 - SITE LAYOUT AND MATERIALS.dwg

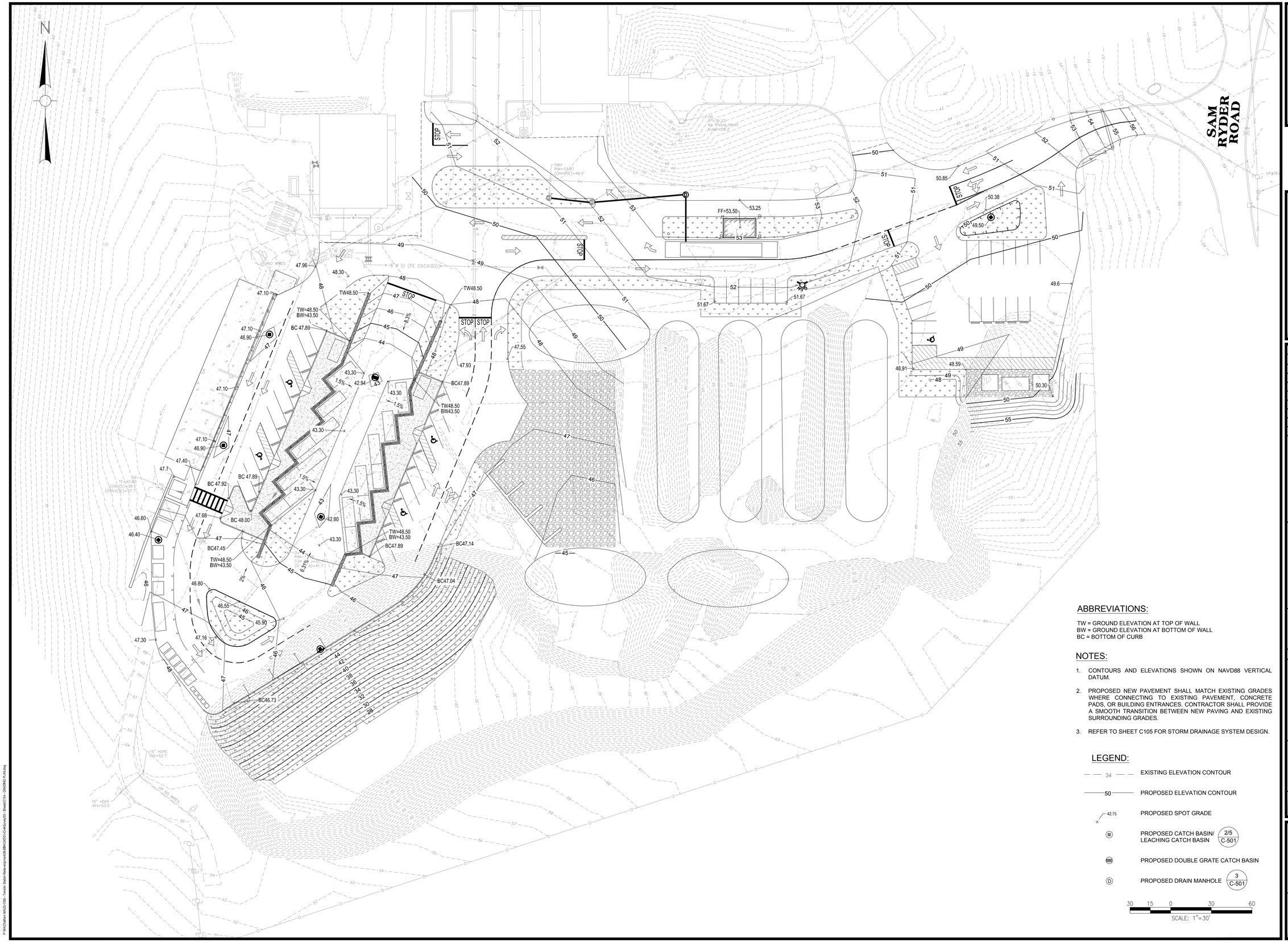

ABBREVIATIONS:

TW = GROUND ELEVATION AT TOP OF WALL
BW = GROUND ELEVATION AT BOTTOM OF WALL
BC = BOTTOM OF CURB

NOTES:

1. CONTOURS AND ELEVATIONS SHOWN ON NAVD88 VERTICAL DATUM.
2. PROPOSED NEW PAVEMENT SHALL MATCH EXISTING GRADES WHERE CONNECTING TO EXISTING PAVEMENT, CONCRETE PADS, OR BUILDING ENTRANCES. CONTRACTOR SHALL PROVIDE A SMOOTH TRANSITION BETWEEN NEW PAVING AND EXISTING SURROUNDING GRADES.
3. REFER TO SHEET C105 FOR STORM DRAINAGE SYSTEM DESIGN.

LEGEND:

— — 34 — —	EXISTING ELEVATION CONTOUR
——50——	PROPOSED ELEVATION CONTOUR
× 42.75	PROPOSED SPOT GRADE
	PROPOSED CATCH BASIN/ LEACHING CATCH BASIN (2/5 C-501)
	PROPOSED DOUBLE GRATE CATCH BASIN
Ⓓ	PROPOSED DRAIN MANHOLE (3 C-501)

30 15 0 30 60
SCALE: 1"=30'

Project:
TOWN OF CHATHAM
TRANSFER STATION
REDEVELOPMENT PROJECT
97 SAM RYDER ROAD, CHATHAM MA

TOWN OF CHATHAM INCORPORATED JUNE 11 1712 MASS.

Weston & Sampson
Weston & Sampson Engineers, Inc.
55 Walkers Brook Drive, Suite 100
Reading, MA 01867
978.532.1900 800.SAMPSON
www.westonandsampson.com

Consultants:

Revisions:

No.	Date	Description

COA:

Seal:
COMMONWEALTH OF MASSACHUSETTS
BRIAN J McCORMACK
ENVIRONMENTAL
No. 47895
REGISTERED PROFESSIONAL ENGINEER

Issued For:
BIDDING

Scale: 1" = 30'

Date:	MARCH 13, 2026
Drawn By:	NWA/AS
Reviewed By:	BJM
Approved By:	BJM
W&S Project No.:	ENG25-1356
W&S File No.:	-

Drawing Title:
GRADING PLAN

Sheet Number:
C104

COPYRIGHT © 2026 WESTON & SAMPSON, INC.

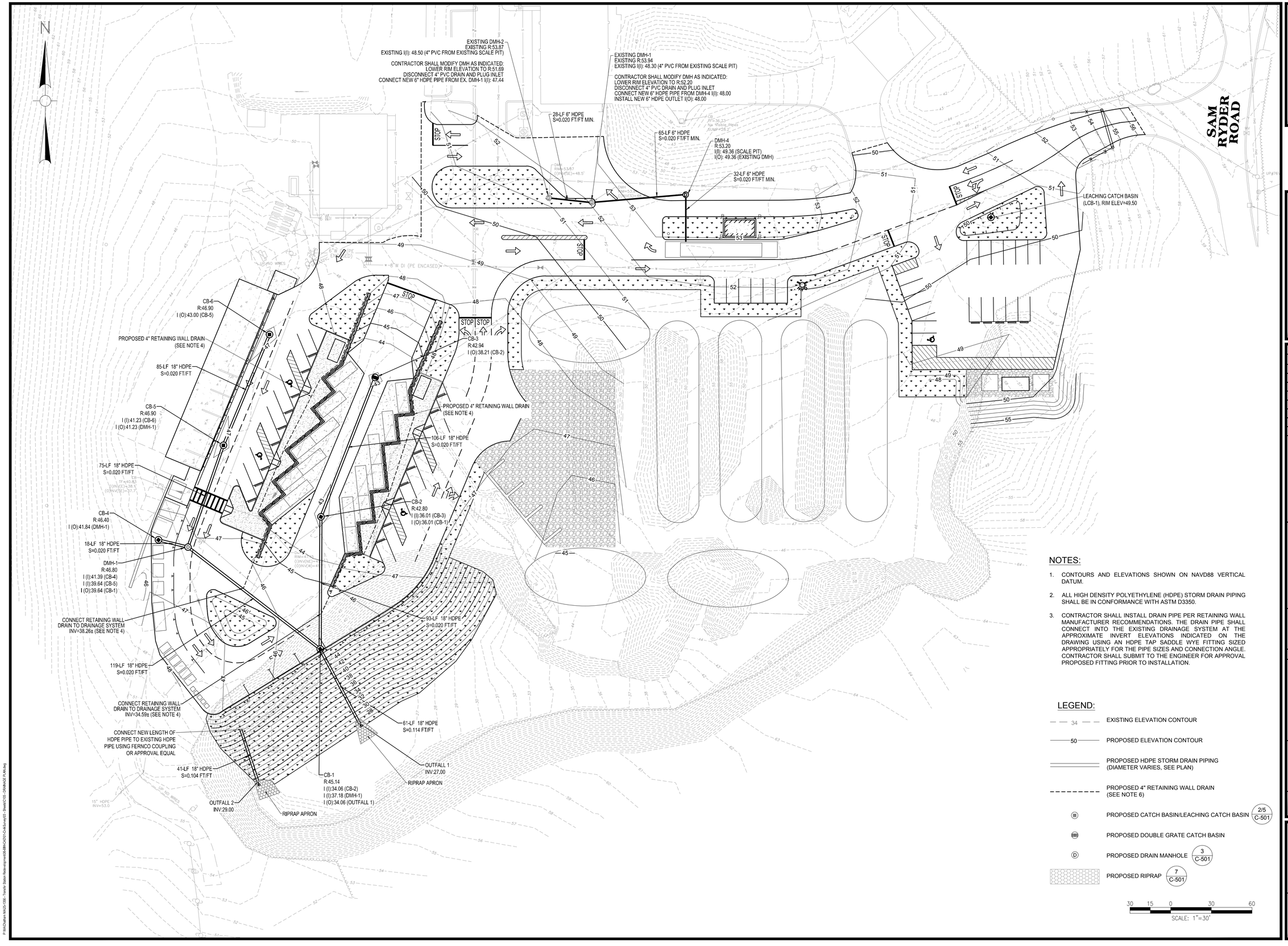

NOTES:

1. CONTOURS AND ELEVATIONS SHOWN ON NAVD88 VERTICAL DATUM.
2. ALL HIGH DENSITY POLYETHYLENE (HDPE) STORM DRAIN PIPING SHALL BE IN CONFORMANCE WITH ASTM D3350.
3. CONTRACTOR SHALL INSTALL DRAIN PIPE PER RETAINING WALL MANUFACTURER RECOMMENDATIONS. THE DRAIN PIPE SHALL CONNECT INTO THE EXISTING DRAINAGE SYSTEM AT THE APPROXIMATE INVERT ELEVATIONS INDICATED ON THE DRAWING USING AN HDPE TAP SADDLE WYE FITTING SIZED APPROPRIATELY FOR THE PIPE SIZES AND CONNECTION ANGLE. CONTRACTOR SHALL SUBMIT TO THE ENGINEER FOR APPROVAL PROPOSED FITTING PRIOR TO INSTALLATION.

LEGEND:

- 34 — EXISTING ELEVATION CONTOUR
- 50 — PROPOSED ELEVATION CONTOUR
- PROPOSED HDPE STORM DRAIN PIPING (DIAMETER VARIES, SEE PLAN)
- PROPOSED 4" RETAINING WALL DRAIN (SEE NOTE 6)
- PROPOSED CATCH BASIN/LEACHING CATCH BASIN (2/5 C-501)
- PROPOSED DOUBLE GRATE CATCH BASIN
- PROPOSED DRAIN MANHOLE (3 C-501)
- PROPOSED RIPRAP (7 C-501)

30 15 0 30 60
SCALE: 1"=30'

Project:
TOWN OF CHATHAM
TRANSFER STATION
REDEVELOPMENT PROJECT
97 SAM RYDER ROAD, CHATHAM MA

TOWN OF CHATHAM INCORPORATED JUNE 11 1712 MASS.

Weston & Sampson
Weston & Sampson Engineers, Inc.
55 Walkers Brook Drive, Suite 100
Reading, MA 01867
978.532.1900 800.SAMPSON
www.westonandsampson.com

Consultants:

Revisions:

No.	Date	Description

COA:

Seal:
COMMONWEALTH OF MASSACHUSETTS
BRIAN J McCORMACK
ENVIRONMENTAL
No. 47895
REGISTERED PROFESSIONAL ENGINEER

Issued For:
BIDDING

Scale: 1" = 30'

Date:	MARCH 13, 2026
Drawn By:	NWA/AS
Reviewed By:	BJM
Approved By:	BJM
W&S Project No.:	ENG25-1356
W&S File No.:	-

Drawing Title:
DRAINAGE PLAN

Sheet Number:
C105

COPYRIGHT © 2026 WESTON & SAMPSON, INC.

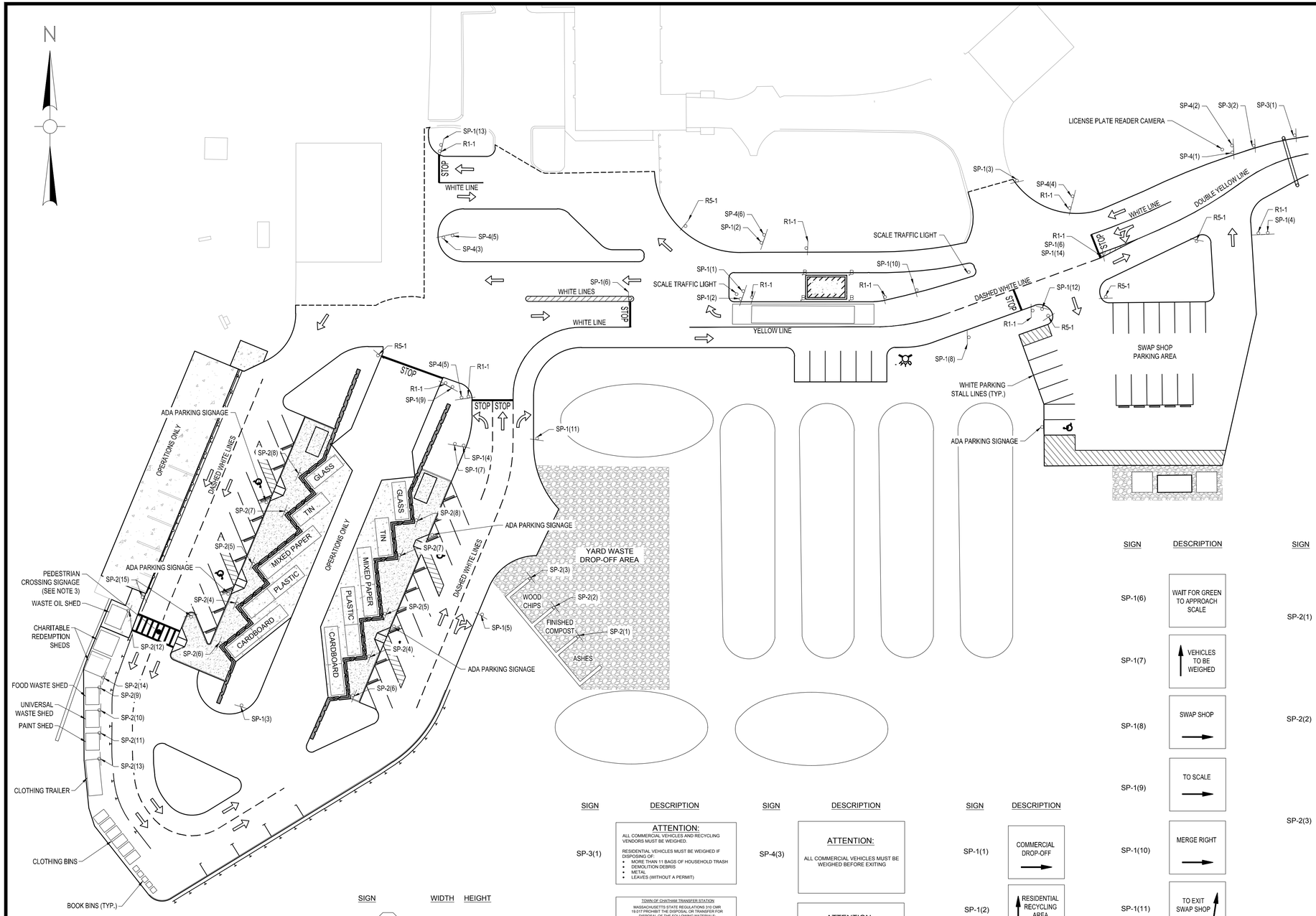

SIGN	DESCRIPTION
SP-2(6)	CORRUGATED CARDBOARD PLEASE FLATTEN
SP-2(7)	CANS TIN ALUMINUM PLEASE RINSE
SP-2(8)	GLASS ANY GLASS THAT IS A FOOD OR BEVERAGE CONTAINER. NO PYREX OR CERAMICS NO PLATE GLASS OR MIRRORS NO PLASTIC OR LIGHT BULBS PLEASE RINSE
SP-2(9)	FOOD COMPOST
SP-2(10)	UNIVERSAL WASTE FLUORESCENT LIGHT BULBS
SP-2(11)	PAINT
SP-2(12)	WASTE OIL SEE ATTENDANT FOR DISPOSAL INSTRUCTIONS
SP-2(13)	GOODWILL CLOTHING DONATIONS
SP-2(14)	RETURNABLES RETURNABLE CANS AND BOTTLES ONLY
SP-2(15)	SLOW PEDESTRIAN CROSSING

SIGN	DESCRIPTION
SP-1(6)	WAIT FOR GREEN TO APPROACH SCALE
SP-1(7)	VEHICLES TO BE WEIGHED
SP-1(8)	SWAP SHOP
SP-1(9)	TO SCALE
SP-1(10)	MERGE RIGHT
SP-1(11)	TO EXIT SWAP SHOP
SP-1(12)	SWAP SHOP ENTER HERE
SP-1(13)	DTM WASTE AREA RECYCLING, YARD WASTE, SCALEHOUSE
SP-1(14)	SWAP SHOP

SIGN	DESCRIPTION
SP-2(1)	ASHES
SP-2(2)	FINISHED COMPOST
SP-2(3)	WOOD CHIPS
SP-2(4)	PLASTIC
SP-2(5)	MIXED PAPER CATALOGUES OFFICE PAPER JUNK MAIL GRAY CARDBOARD PHONE BOOKS CEREAL BOXES NEWSPAPER GIFT BOXES FLATTENED

SIGN	DESCRIPTION
SP-3(1)	ATTENTION: ALL COMMERCIAL VEHICLES AND RECYCLING VENDORS MUST BE WEIGHED. RESIDENTIAL VEHICLES MUST BE WEIGHED IF DISPOSING OF: • MORE THAN 11 BAGS OF HOUSEHOLD TRASH • DEMOLITION DEBRIS • METAL • LEAVES (WITHOUT A PERMIT)
SP-3(2)	TOWN OF CHATHAM TRANSFER STATION MASSACHUSETTS STATE REGULATIONS 310 CMR 19.017 PROHIBIT THE DISPOSAL OR TRANSFER FOR DISPOSAL OF THE FOLLOWING MATERIALS: • ASPHALT PAVEMENT, BRICK, CONCRETE • CATHODE RAY TUBES • CLEAN GYPSUM WALLBOARD • COMPOSTABLE ORGANIC MATERIAL • GLASS CONTAINERS • LEAD BATTERIES • MERCURY CONTAINING WASTE • MATTRESSES • METAL • PLASTIC CONTAINERS • RECYCLABLE PAPER • SINGLE POLYMER PLASTICS • SOFA FURNITURE • WHOLE TIRES • WOOD • TEXTILES FOR INFORMATION, PLEASE SEE FACILITY ATTENDANT.
SP-4(1)	VEHICLES TO BE WEIGHED USE LEFT LANE SWAP SHOP USE LEFT LANE
SP-4(2)	RESIDENTIAL VEHICLES NOT TO BE WEIGHED USE RIGHT LANE

SIGN	DESCRIPTION
SP-4(3)	ATTENTION: ALL COMMERCIAL VEHICLES MUST BE WEIGHED BEFORE EXITING
SP-4(4)	ATTENTION: ALL VEHICLES STOP AT GATE HOUSE
SP-4(5)	ATTENTION: VEHICLES MUST BE WEIGHED PRIOR TO EXITING TRANSFER STATION IF DISPOSING OF: • DEMOLITION DEBRIS • METAL • LEAVES (WITHOUT A PERMIT)
SP-4(6)	MSW / HOUSEHOLD TRASH DROP-OFF DIFFICULT TO MANAGE (DTM) WASTE AREA: • PROPANE TANKS • DEMOLITION DEBRIS • METAL • WHITE GOODS • FREON ITEMS • ELECTRONICS • TIRES • AUTO BATTERIES • MATTRESSES • FISH NETS KEEP RIGHT

SIGN	DESCRIPTION
SP-1(1)	COMMERCIAL DROP-OFF
SP-1(2)	RESIDENTIAL RECYCLING AREA
SP-1(3)	AUTHORIZED VEHICLES ONLY
SP-1(4)	EXIT
SP-1(5)	YARD WASTE COMPOST NEXT ENTRANCE RIGHT

SIGN	WIDTH	HEIGHT
R1-1 (STOP)	30"	30"
R5-1 (DO NOT ENTER)	30"	30"
SP-1	24"	24"
SP-2	12"	18"
SP-3	60"	48"
SP-4	48"	36"

NOTES:

1. SIGNAGE SHALL BE RENDERED WITH APPROPRIATE LOGOS, COLORS, AND ICONS TO ENHANCE VISUAL SIGNAGE DISPLAY. CONTRACTOR SHALL USE EXISTING SIGNAGE AS A TEMPLATE FOR PROPOSED SIGNAGE INCLUDING CONFIGURATION, COLORATION, FONT SIZE, AND ICONOGRAPHY.

2. CONTRACTOR SHALL SUBMIT SHOP DRAWINGS TO THE ENGINEER AND OWNER PRIOR TO FABRICATION. PRODUCT SHOP DRAWINGS SHALL INCLUDE PROPOSED SIGNAGE DIMENSIONS, COLORS, FONT TYPES, AND SIGNAGE MATERIAL.

3. CONTRACTOR SHALL FURNISH AND INSTALL A MUTCD-COMPLIANT 36"H BY 12"W FLUORESCENT GREEN DIAMOND-GRADE REFLECTIVE SIGN WITHIN THE CROSSWALK. SIGNAGE SHALL BE DOUBLE-SIDED AND INCLUDE A BASE WITH A REACTIVE SPRING ASSEMBLY TO PREVENT DAMAGE UPON IMPACT. SIGN SHALL INCLUDE "STOP FOR PEDESTRIANS WITHIN CROSSWALK" OR SIMILAR APPROVED LANGUAGE.

30 15 0 30 60
SCALE: 1"=30'

1 SIGNAGE DIMENSIONS
SCALE: NTS

2 SIGNAGE SCHEDULE
SCALE: NTS

Project:
TOWN OF CHATHAM
TRANSFER STATION
REDEVELOPMENT PROJECT
97 SAM RYDER ROAD, CHATHAM MA

TOWN OF CHATHAM INCORPORATED JUNE 11 1712 MASS.

Weston & Sampson
Weston & Sampson Engineers, Inc.
55 Walkers Brook Drive, Suite 100
Reading, MA 01867
978.532.1900 800.SAMPSON
www.westonandsampson.com

Consultants:

Revisions:

No.	Date	Description

COA:

Seal: COMMONWEALTH OF MASSACHUSETTS BRIAN J McCORMACK ENVIRONMENTAL No. 47895 REGISTERED PROFESSIONAL ENGINEER

Issued For:
BIDDING

Scale: 1" = 30'

Date: MARCH 13, 2026
Drawn By: NWA/AS
Reviewed By: BJM
Approved By: BJM
W&S Project No.: ENG25-1356
W&S File No.: -

Drawing Title:
TRAFFIC MANAGEMENT AND SIGNAGE PLAN

Sheet Number:
C106

COPYRIGHT © 2026 WESTON & SAMPSON, INC.

P:\MA\Chatham MA\25-1356 - Transfer Station Redevelopment\06\MA\CADD\Civil\Survey\01 - Sheets\C106 - TRAFFIC MANAGEMENT.dwg

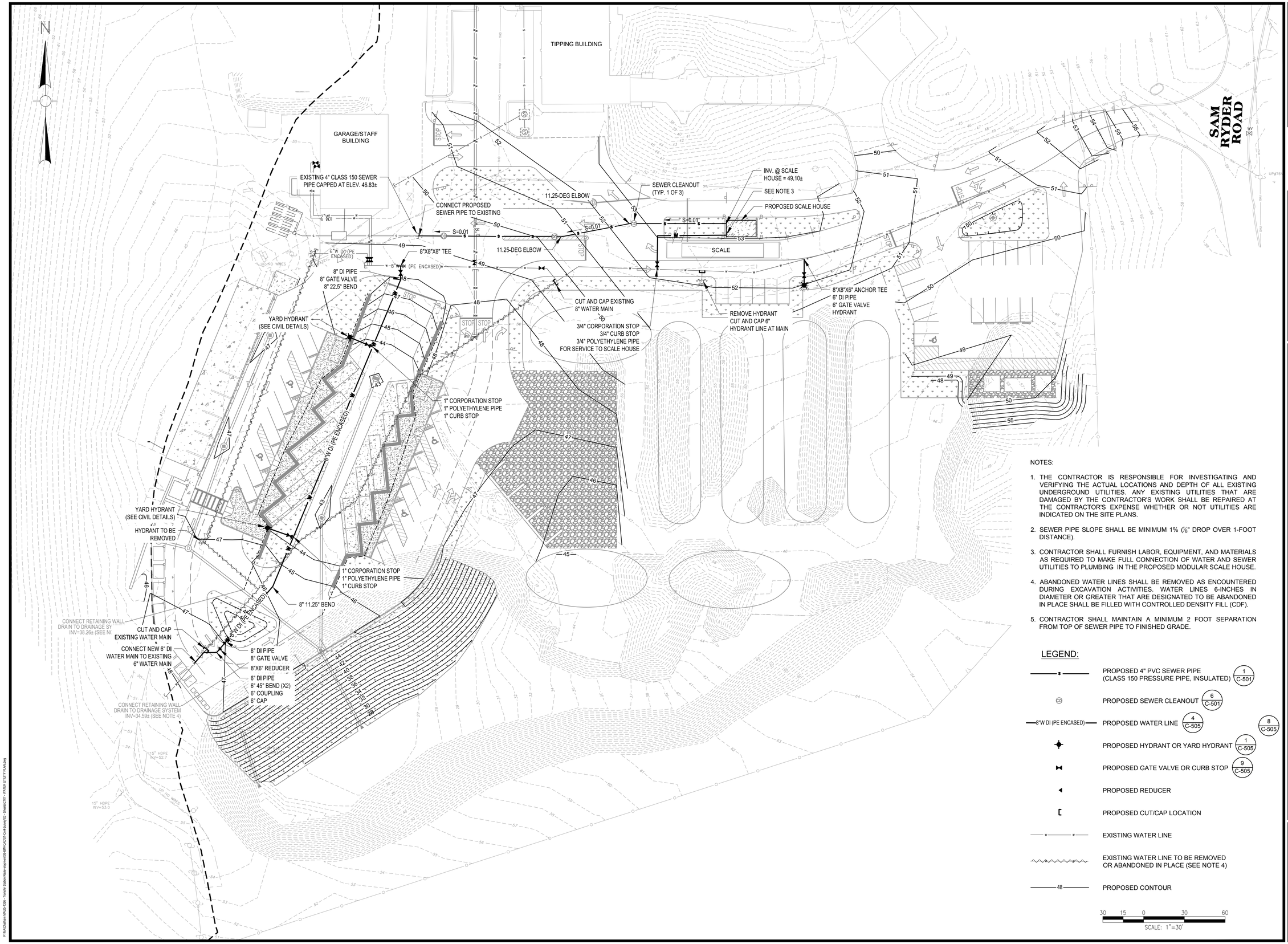

NOTES:

1. THE CONTRACTOR IS RESPONSIBLE FOR INVESTIGATING AND VERIFYING THE ACTUAL LOCATIONS AND DEPTH OF ALL EXISTING UNDERGROUND UTILITIES. ANY EXISTING UTILITIES THAT ARE DAMAGED BY THE CONTRACTOR'S WORK SHALL BE REPAIRED AT THE CONTRACTOR'S EXPENSE WHETHER OR NOT UTILITIES ARE INDICATED ON THE SITE PLANS.
2. SEWER PIPE SLOPE SHALL BE MINIMUM 1% (⅛" DROP OVER 1-FOOT DISTANCE).
3. CONTRACTOR SHALL FURNISH LABOR, EQUIPMENT, AND MATERIALS AS REQUIRED TO MAKE FULL CONNECTION OF WATER AND SEWER UTILITIES TO PLUMBING IN THE PROPOSED MODULAR SCALE HOUSE.
4. ABANDONED WATER LINES SHALL BE REMOVED AS ENCOUNTERED DURING EXCAVATION ACTIVITIES. WATER LINES 6-INCHES IN DIAMETER OR GREATER THAT ARE DESIGNATED TO BE ABANDONED IN PLACE SHALL BE FILLED WITH CONTROLLED DENSITY FILL (CDF).
5. CONTRACTOR SHALL MAINTAIN A MINIMUM 2 FOOT SEPARATION FROM TOP OF SEWER PIPE TO FINISHED GRADE.

LEGEND:

—— S ——	PROPOSED 4" PVC SEWER PIPE (CLASS 150 PRESSURE PIPE, INSULATED) (1 / C-501)
CO	PROPOSED SEWER CLEANOUT (6 / C-501)
—8"W DI (PE ENCASED)—	PROPOSED WATER LINE (4 / C-505) (8 / C-505)
	PROPOSED HYDRANT OR YARD HYDRANT (1 / C-505)
	PROPOSED GATE VALVE OR CURB STOP (9 / C-505)
	PROPOSED REDUCER
	PROPOSED CUT/CAP LOCATION
—— W —— W ——	EXISTING WATER LINE
	EXISTING WATER LINE TO BE REMOVED OR ABANDONED IN PLACE (SEE NOTE 4)
—— 48 ——	PROPOSED CONTOUR

30 15 0 30 60
SCALE: 1"=30'

Project:
TOWN OF CHATHAM
TRANSFER STATION
REDEVELOPMENT PROJECT
97 SAM RYDER ROAD, CHATHAM MA

TOWN OF CHATHAM INCORPORATED JUNE 11 1712 MASS.

Weston & Sampson
Weston & Sampson Engineers, Inc.
55 Walkers Brook Drive, Suite 100
Reading, MA 01867
978.532.1900 800.SAMPSON
www.westonandsampson.com

Consultants:

Revisions:

No.	Date	Description

COA:

Seal:
COMMONWEALTH OF MASSACHUSETTS
BRIAN J McCORMACK
ENVIRONMENTAL
No. 47895
REGISTERED PROFESSIONAL ENGINEER

Issued For:
BIDDING

Scale: 1" = 30'

Date:	MARCH 13, 2026
Drawn By:	NWA/AS
Reviewed By:	BJM
Approved By:	BJM
W&S Project No.:	ENG25-1356
W&S File No.:	-

Drawing Title:
WATER AND SEWER UTILITY PLAN

Sheet Number:
C107

COPYRIGHT © 2026 WESTON & SAMPSON, INC.

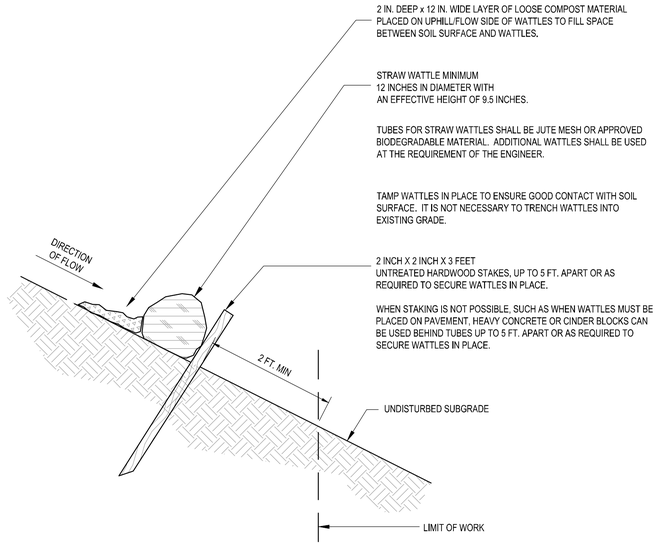

GENERAL NOTES:

1. PROVIDE A MINIMUM WATTLE DIAMETER OF 12 INCHES FOR SLOPES UP TO 50 FEET IN LENGTH WITH A SLOPE RATIO OF 3H:1V OR STEEPER. LONGER SLOPES OF 3H:1V MAY REQUIRE LARGER WATTLE DIAMETER OR ADDITIONAL COURSING OF WATTLES TO CREATE A FILTER BERM. REFER TO MANUFACTURER'S RECOMMENDATIONS FOR SITUATIONS WITH LONGER OR STEEPER SLOPES.
2. INSTALL WATTLES ALONG CONTOURS AND PERPENDICULAR TO SHEET OR CONCENTRATED FLOW.
3. DO NOT INSTALL IN PERENNIAL, EPHEMERAL OR INTERMITTENT STREAMS.
4. CONFIGURE WATTLES AROUND EXISTING SITE FEATURES TO MINIMIZE SITE DISTURBANCE AND MAXIMIZE CAPTURE AREA OF STORMWATER RUN-OFF.

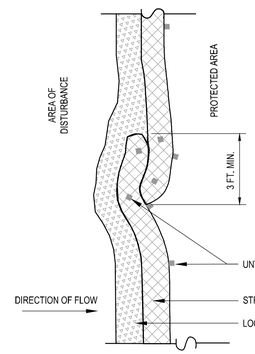

PROVIDE A 3 FT. MINIMUM OVERLAP AT ENDS OF WATTLES TO JOIN IN A CONTINUOUS BARRIER AND MINIMIZE UNIMPEDED FLOW.

STAKE JOINING WATTLES SNUGLY AGAINST EACH OTHER TO PREVENT UNFILTERED FLOW BETWEEN THEM.

SECURE ENDS OF WATTLES WITH STAKES SPACED 18 IN. APART THROUGH TOPS OF WATTLES.

PLAN VIEW - JOINT DETAIL

1 STRAW WATTLE DETAIL

SCALE: NTS

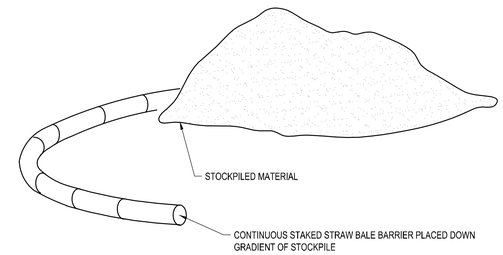

NOTE: EXCAVATED MATERIALS TO BE STOCKPILED ON AND COVERED BY POLYETHYLENE SHEETING.

2 TEMPORARY STOCKPILE DETAIL

SCALE: NTS

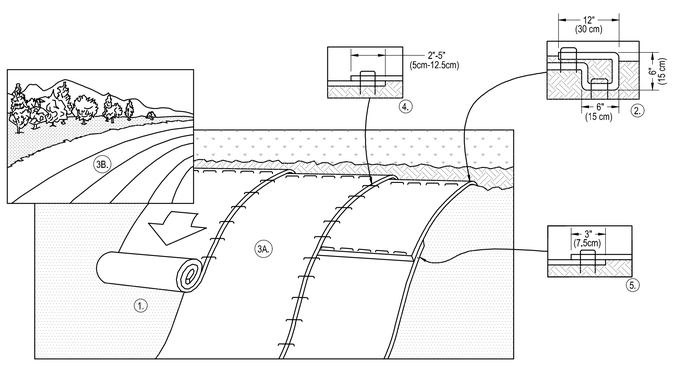

NOTES:

1. PREPARE SOIL BEFORE INSTALLING BLANKETS, INCLUDING ANY NECESSARY APPLICATION OF LIME, FERTILIZER, AND SEED.
2. BEGIN AT THE TOP OF THE SLOPE BY ANCHORING THE BLANKET IN A 6" (15cm) DEEP X 6" (15cm) WIDE TRENCH.
3. ROLL THE BLANKETS (A.) DOWN OR (B.) HORIZONTALLY ACROSS THE SLOPE. ALL BLANKETS MUST BE SECURELY FASTENED TO SOIL SURFACE BY PLACING STAPLES/STAKES IN APPROPRIATE LOCATIONS AS SHOWN IN THE STAPLE PATTERN GUIDE.
4. THE EDGES OF PARALLEL BLANKETS MUST BE STAPLED WITH APPROXIMATELY 2"-5" (5cm-12.5cm) OVERLAP DEPENDING ON BLANKET TYPE.
5. CONSECUTIVE BLANKETS SPLICED DOWN THE SLOPE MUST BE PLACED END OVER END (SHINGLE STYLE) WITH AN APPROXIMATE 3" (7.5cm) OVERLAP. STAPLE THROUGH OVERLAPPED AREA, APPROXIMATELY 12" (30cm) APART ACROSS ENTIRE BLANKET WIDTH.

3 EROSION CONTROL BLANKET DETAIL

SCALE: NTS

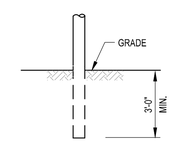

NOTES:

1. SEE SPECIFICATION SECTION 01 56 26.*
2. PORTABLE/TEMPORARY CHAIN LINK FENCE IS ALLOWABLE.

DRIVEN POST DETAIL
N.T.S.

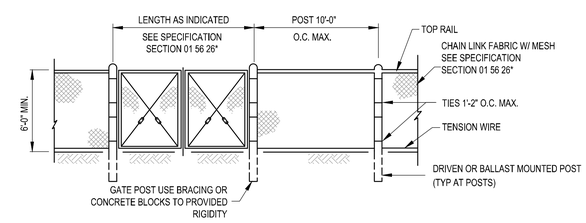

4 TEMPORARY CHAIN LINK FENCE AND GATE DETAIL

SCALE: NTS

Project:
TOWN OF CHATHAM
TRANSFER STATION
REDEVELOPMENT PROJECT
97 SAM RYDER ROAD, CHATHAM MA

TOWN OF CHATHAM INCORPORATED JUNE 11 1712 MASS.

Weston & Sampson

Weston & Sampson Engineers, Inc.
55 Walkers Brook Drive, Suite 100
Reading, MA 01867
978.532.1900 800.SAMPSON
www.westonandsampson.com

Consultants:

Revisions:

No.	Date	Description

COA:

Seal: COMMONWEALTH OF MASSACHUSETTS BRIAN J McCORMACK ENVIRONMENTAL No. 47895 REGISTERED PROFESSIONAL ENGINEER

Issued For:
BIDDING

Scale: AS NOTED

Date:	MARCH 13, 2026
Drawn By:	NWA/AS
Reviewed By:	BJM
Approved By:	BJM
W&S Project No.:	ENG25-1356
W&S File No.:	-

Drawing Title:
CONSTRUCTION DETAILS

Sheet Number:
C500

COPYRIGHT © 2026 WESTON & SAMPSON, INC.

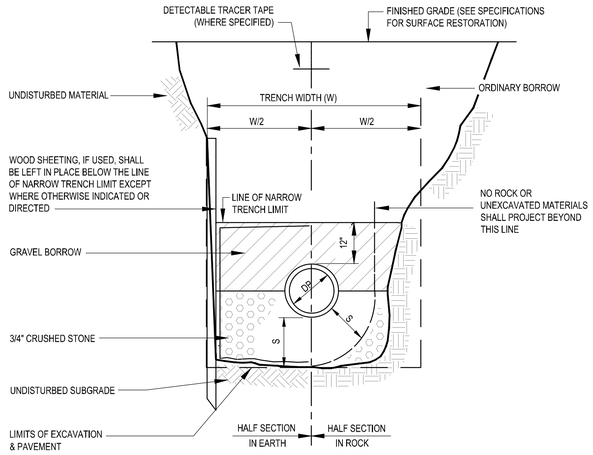

NOTE:
FOR W, DP, & S, SEE TABLE A

DEPTH TO INVERT	DIAMETER OF PIPE (DP)	MAXIMUM TRENCH WIDTH BELOW LINE OF NARROW TRENCH LIMIT (SHEETED OR UNSHEETED) (W)	MINIMUM CLEARANCE (S)
0-12'	TO 18"	5'	6"
0-12'	21"-24"	5'	7-1/2"
OVER 12'	TO 18"	7'	6"
OVER 12'	21"-24"	7'	7-1/2"

TABLE A

1 STORM DRAIN/SEWER TRENCH DETAIL
SCALE: NTS

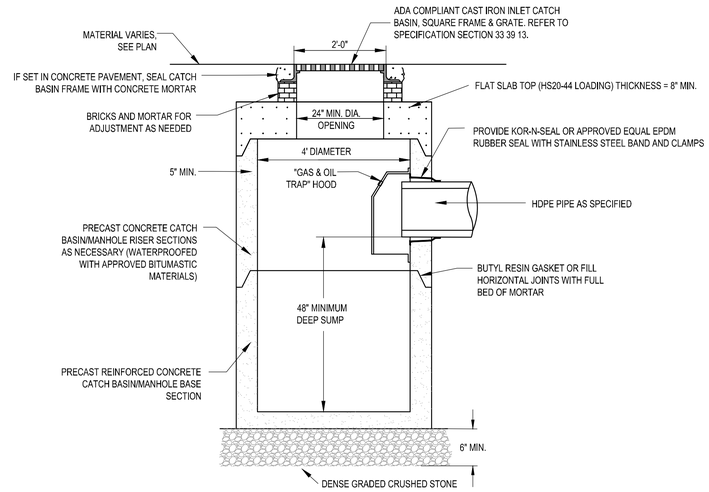

2 DEEP SUMP CATCH BASIN WITH HOOD
SCALE: NTS

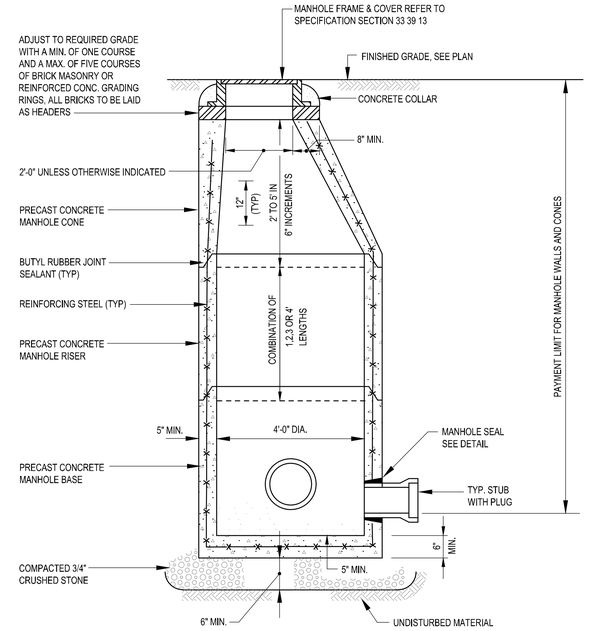

3 4'0" DIA. PRECAST MANHOLE DETAIL
SCALE: NTS

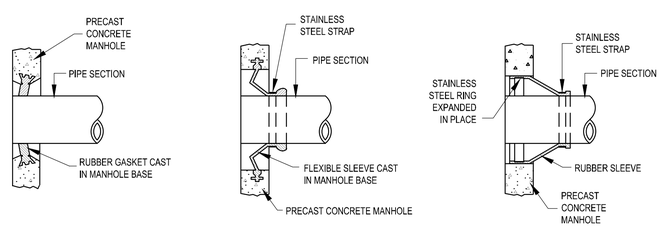

4 MANHOLE AND CATCH BASIN SEAL DETAIL
SCALE: NTS

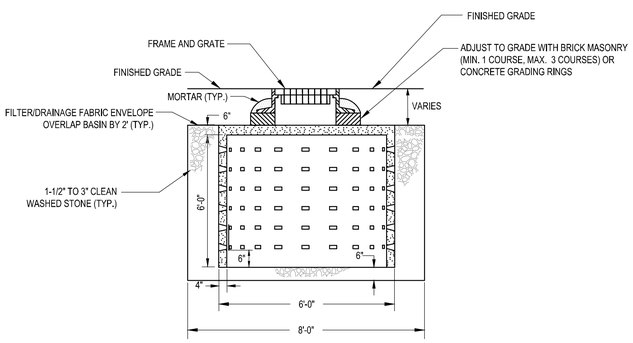

NOTES

1. CONTRACTOR TO USE EXTREME CARE IN ENSURING THAT FILTER FABRIC COMPLETELY SURROUNDS LEACHING CATCH BASIN SYSTEM. ADJACENT FILTER/DRAINAGE FABRIC SECTIONS TO OVERLAP A MINIMUM OF 2'-0".
2. LEACHING CATCH BASIN TO BE INSTALLED ON LEVEL GRADIENT.
3. FILTER FABRIC SHALL BE MIRAFI 160N OR APPROVED EQUAL.

5 LEACHING CATCH BASIN DETAIL
SCALE: NTS

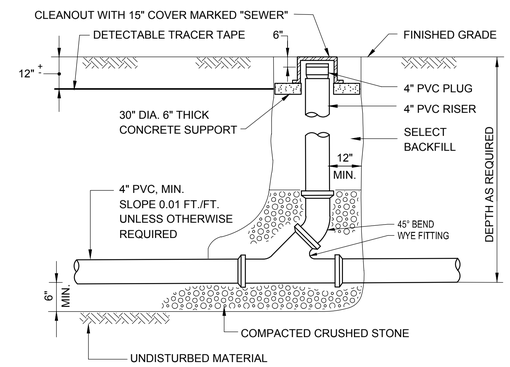

6 SEWER CLEANOUT DETAIL
SCALE: NTS

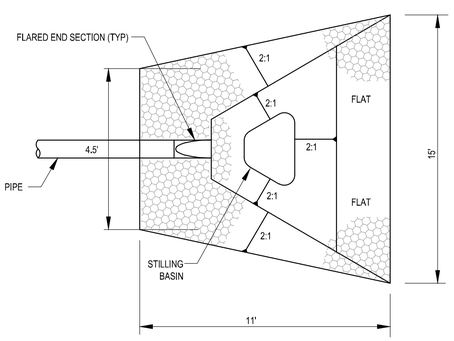

PLAN

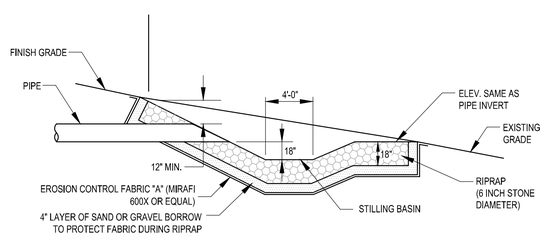

SECTION

7 RIPRAP FOR PIPE END DETAIL
SCALE: NTS

Project:
TOWN OF CHATHAM
TRANSFER STATION
REDEVELOPMENT PROJECT
97 SAM RYDER ROAD, CHATHAM MA

Weston & Sampson Engineers, Inc.
55 Walkers Brook Drive, Suite 100
Reading, MA 01867
978.532.1900 800.SAMPSON
www.westonandsampson.com

Consultants:

Revisions:

No.	Date	Description

COA:

Seal:

Issued For:
BIDDING

Scale: AS NOTED

Date:	MARCH 13, 2026
Drawn By:	NWA/AS
Reviewed By:	BJM
Approved By:	BJM
W&S Project No.:	ENG25-1356
W&S File No.:	-

Drawing Title:
CONSTRUCTION DETAILS

Sheet Number:
C501

COPYRIGHT © 2026 WESTON & SAMPSON, INC.

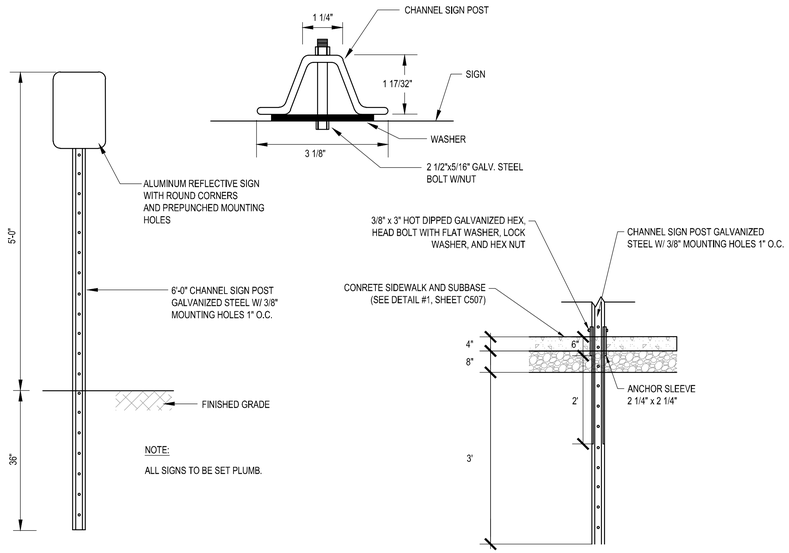

1 SIGNAGE MOUNTING

SCALE: NTS

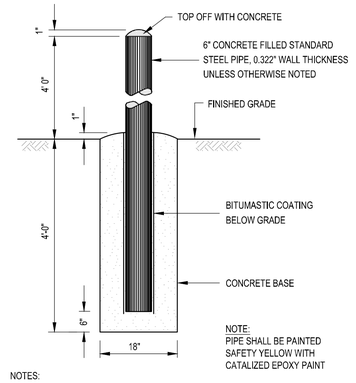

NOTES:

1. SEE CIVIL PLANS FOR BOLLARD LOCATIONS.
2. BOLLARD FOUNDATION CONCRETE TO BE 3000 PSI MIN.
3. EXACT LOCATION TO BE DETERMINED IN THE FIELD AND APPROVED BY TOWN BEFORE INSTALLATION.

2 BOLLARD DETAIL

SCALE: NTS

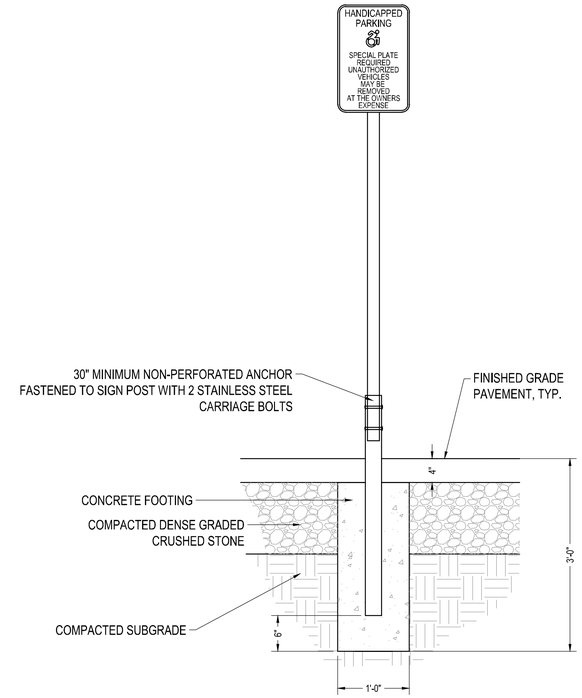

3 HANDICAPPED PARKING STALL SIGNAGE DETAIL

SCALE: NTS

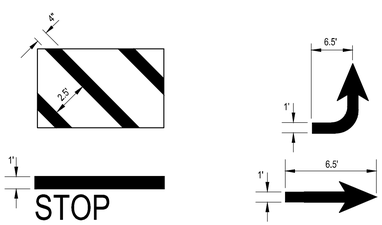

4 ROAD MARKINGS

SCALE: NTS

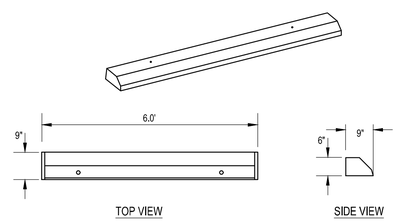

NOTES:

1. BUMPER CURB SHALL BE PINNED IN PLACE IN ACCORDANCE WITH MANUFACTURER'S RECOMMENDATIONS.
2. CONCRETE SHALL BE 4,000 PSI MINIMUM AFTER 28 DAYS.

5 CONCRETE BUMPER CURB

SCALE: NTS

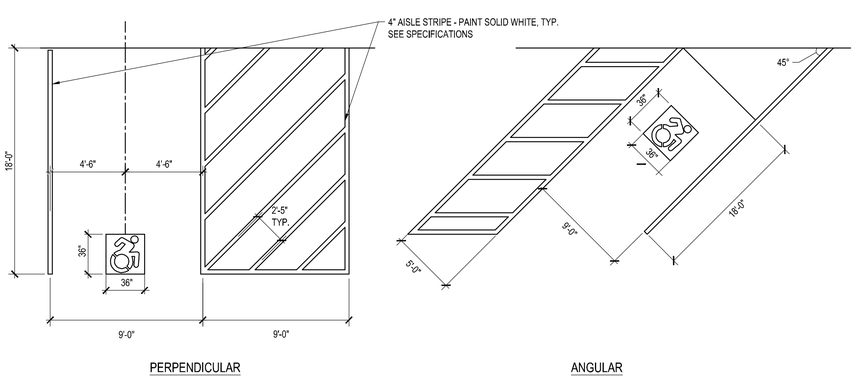

NOTES:

1. SEE SPECIFICATIONS FOR ALL PAVEMENT MARKINGS.
2. UNIVERSAL WHITE PAINTED ADA SYMBOL PLACED IN A BLUE PAINTED FIELD.

6 HANDICAPPED PARKING SPACE MARKING

SCALE: NTS

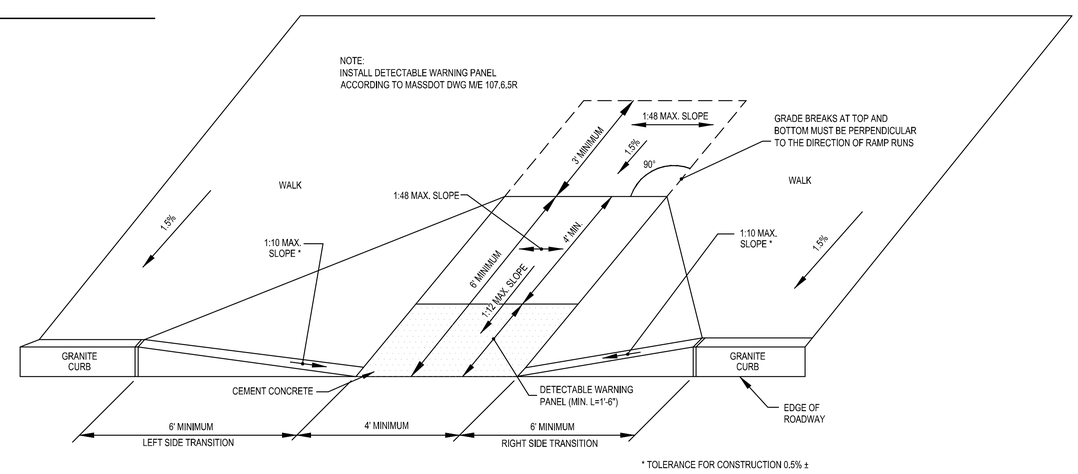

7 WHEEL CHAIR RAMP DETAIL

SCALE: NTS

Project:
TOWN OF CHATHAM
TRANSFER STATION
REDEVELOPMENT PROJECT
97 SAM RYDER ROAD, CHATHAM MA

Weston & Sampson Engineers, Inc.
55 Walkers Brook Drive, Suite 100
Reading, MA 01867
978.532.1900 800.SAMPSON
www.westonandsampson.com

Consultants:

Revisions:

No.	Date	Description

COA:

Seal: COMMONWEALTH OF MASSACHUSETTS BRIAN J McCORMACK ENVIRONMENTAL No. 47895 REGISTERED PROFESSIONAL ENGINEER

Issued For:
BIDDING

Scale: AS NOTED

Date:	MARCH 13, 2026
Drawn By:	NWA/AS
Reviewed By:	BJM
Approved By:	BJM
W&S Project No.:	ENG25-1356
W&S File No.:	-

Drawing Title:
CONSTRUCTION DETAILS

Sheet Number:
C502

COPYRIGHT © 2026 WESTON & SAMPSON, INC.

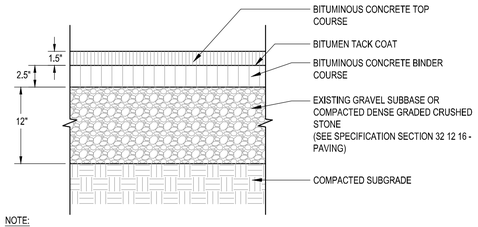

NOTE:

1. CONTRACTOR TO PROVIDE SMOOTH TRANSITION WHERE NEW PAVEMENT ABUTS EXISTING PAVEMENT, TYP.

1 BITUMINOUS CONCRETE PAVEMENT

SCALE: NTS

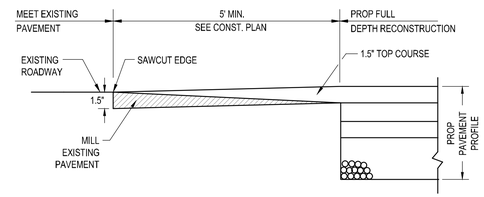

2 PROPOSED PAVEMENT TRANSITION

SCALE: NTS

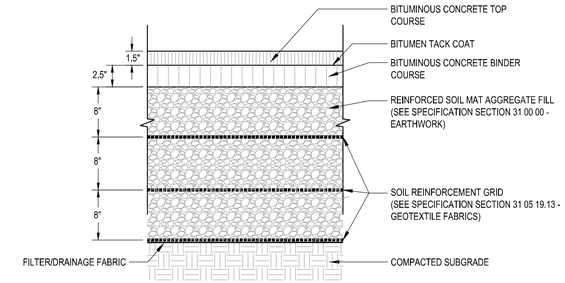

NOTE:

1. REINFORCED SOIL MAT SHALL EXTEND A MINIMUM OF 4-FEET PAST THE HORIZONTAL LIMITS OF PROPOSED PAVING.
2. EXPOSED SUBGRADES WILL LIKELY BE WITHIN THE WOOD DEBRIS/FILL AREA. OVER EXCAVATION TO REMOVE THIS MATERIAL IS NOT REQUIRED BELOW THE REINFORCED SOIL MAT.

3 PAVEMENT WITH REINFORCED SOIL MAT

SCALE: NTS

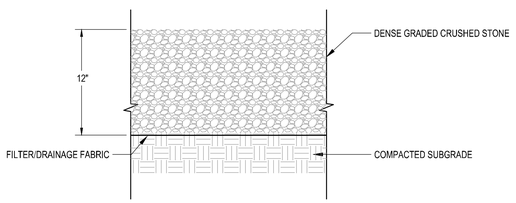

4 YARD WASTE AREA GRAVEL SURFACE DETAIL

SCALE: NTS

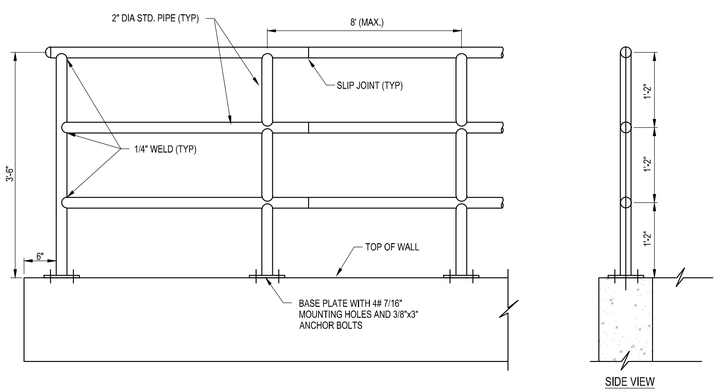

NOTE:

1. HANDRAIL SHALL BE CONTINUOUS AND HAVE MINIMUM 3' 6" HEIGHT FOR FALL PROTECTION AT THE TOP OF PROPOSED RETAINING WALLS AS SHOWN ON CIVIL PLANS.
2. CONTRACTOR SHALL SUBMIT TO THE ENGINEER FOR APPROVAL PRIOR TO INSTALLATION CUT SHEETS AND SHOP DRAWINGS OF PROPOSED RAILING INCLUDING PROPOSED MATERIALS, DIMENSIONS, HARDWARE, CLOSING SYSTEMS, POSTS AND FOUNDATIONS.

5 METAL HANDRAIL DETAIL

SCALE: NTS

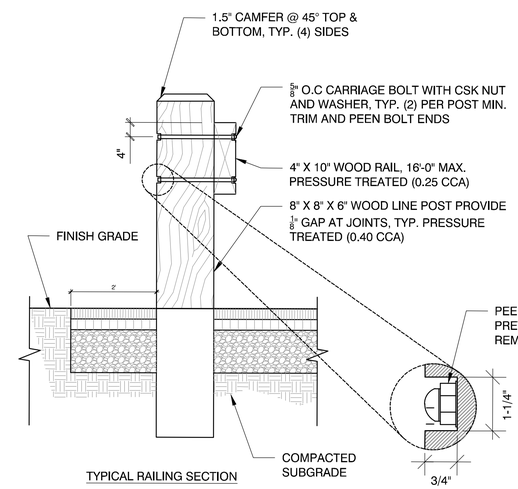

TYPICAL RAILING SECTION

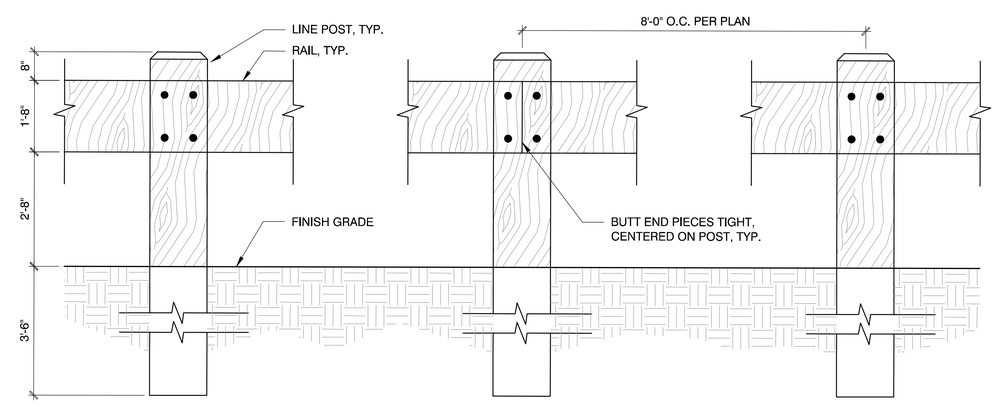

TYPICAL RAILING ELEVATION

NOTE: CONTRACTOR SHALL SUBMIT SHOP DRAWINGS OF PROPOSED WOODEN GUARD RAIL TO ENGINEER FOR APPROVAL.

6 WOOD GUARDRAIL DETAIL

SCALE: NTS

Project:
TOWN OF CHATHAM
TRANSFER STATION
REDEVELOPMENT PROJECT
97 SAM RYDER ROAD, CHATHAM MA

Weston & Sampson Engineers, Inc.
55 Walkers Brook Drive, Suite 100
Reading, MA 01867
978.532.1900 800.SAMPSON
www.westonandsampson.com

Consultants:

Revisions:

No.	Date	Description

COA:

Seal:

Issued For:
BIDDING

Scale:

Date:	MARCH 13, 2026
Drawn By:	NWA/AS
Reviewed By:	BJM
Approved By:	BJM
W&S Project No.:	ENG25-1356
W&S File No.:	-

Drawing Title:
CONSTRUCTION DETAILS

Sheet Number:
C503

COPYRIGHT © 2026 WESTON & SAMPSON, INC.

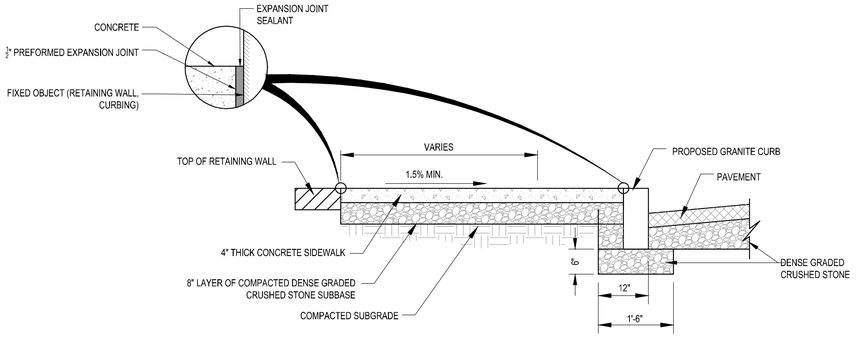

NOTES:

1. PROVIDE PRE-MOLDED EXPANSION JOINTS AT MIN. 30' O.C.
2. PROVIDE TOOLED DUMMY JOINTS AT 4' O.C. (MIN. 1" DEPTH).
3. BROOM FINISH PATTERN.

1 CONCRETE SIDEWALK
SCALE: NTS

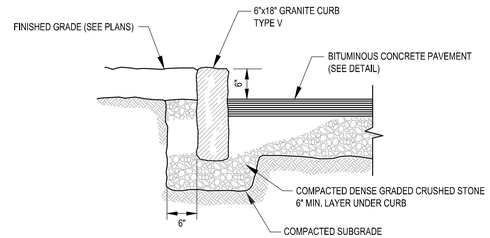

2 VERTICAL GRANITE CURB
SCALE: NTS

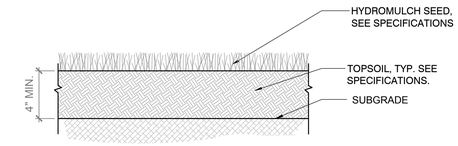

3 LOAM AND SEED DETAIL
SCALE: NTS

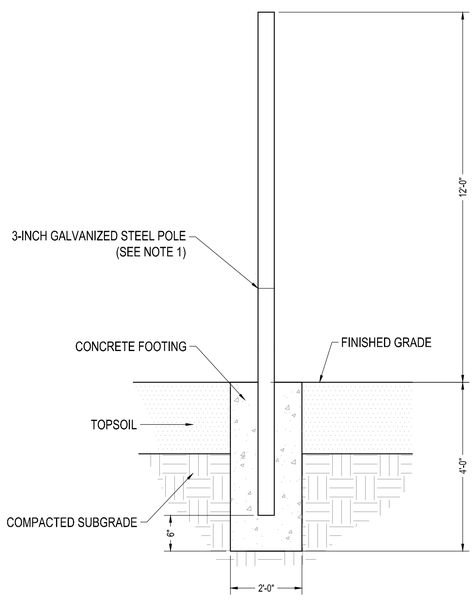

4 LICENSE PLATE READER POLE AND FOUNDATION DETAIL
SCALE: NTS

NOTES:

1. IF MULTIPLE GALVANIZED STEEL PIPE SECTIONS ARE USED, THE SECTIONS SHALL BE THREADED TOGETHER.

2. LICENSE PLATE READER HARDWARE TO BE INSTALLED BY LICENSE PLATE READER VENDOR.

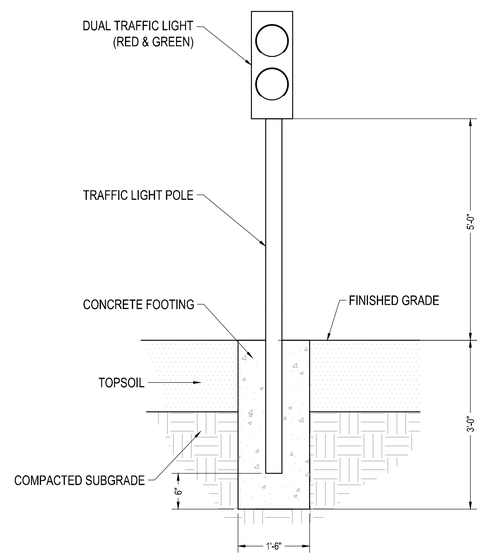

5 TRAFFIC LIGHT POLE FOUNDATION DETAIL
SCALE: NTS

NOTE:

THIS DETAIL IS A MINIMUM REQUIRED FOUNDATION FOR THE TRAFFIC LIGHT. TRAFFIC LIGHT SHALL BE INSTALLED PER MANUFACTURER RECOMMENDATIONS.

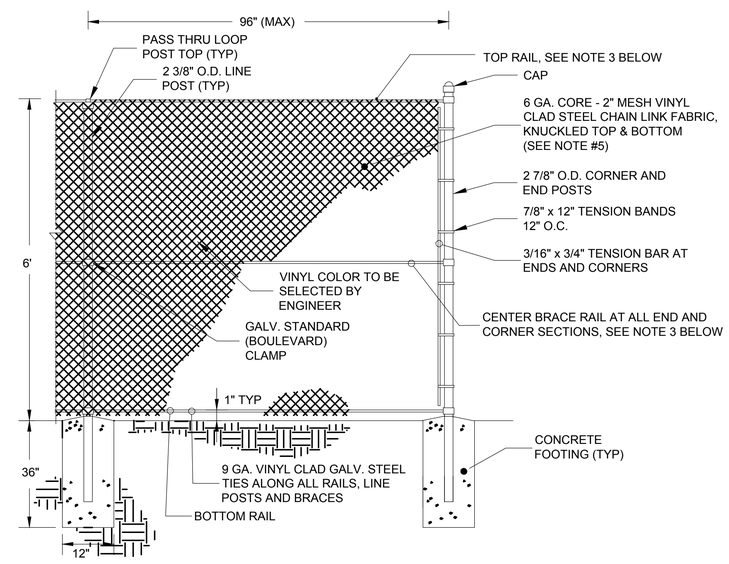

NOTES:
1. ALL FENCE PIPE SHALL BE SCH. 40, VINYL CLAD HOT DIP GALV. STEEL PIPE.
2. ALL LINE POSTS SHALL BE INSTALLED EQUALLY SPACED BETWEEN END & CORNER POSTS.
3. ALL RAILS SHALL BE 1.66" O.D. PIPE
4. ALL CLAMPS, TIES, POST TOPS, BANDS, POSTS, ETC. SHALL BE VINYL CLAD TO MATCH FABRIC.

6 PERMANENT CHAIN LINK FENCE DETAIL
SCALE: NTS

Project:
TOWN OF CHATHAM
TRANSFER STATION
REDEVELOPMENT PROJECT
97 SAM RYDER ROAD, CHATHAM MA

TOWN OF CHATHAM INCORPORATED JUNE 11 1712 MASS.

Weston & Sampson
Weston & Sampson Engineers, Inc.
55 Walkers Brook Drive, Suite 100
Reading, MA 01867
978.532.1900 800.SAMPSON
www.westonandsampson.com

Consultants:

Revisions:

No.	Date	Description

COA:

Seal: COMMONWEALTH OF MASSACHUSETTS BRIAN J McCORMACK ENVIRONMENTAL No. 47895 REGISTERED PROFESSIONAL ENGINEER

Issued For:
BIDDING

Scale: AS NOTED

Date:	MARCH 13, 2026
Drawn By:	NWA/AS
Reviewed By:	BJM
Approved By:	BJM
W&S Project No.:	ENG25-1356
W&S File No.:	-

Drawing Title:
CONSTRUCTION DETAILS

Sheet Number:
C504

COPYRIGHT © 2026 WESTON & SAMPSON, INC.

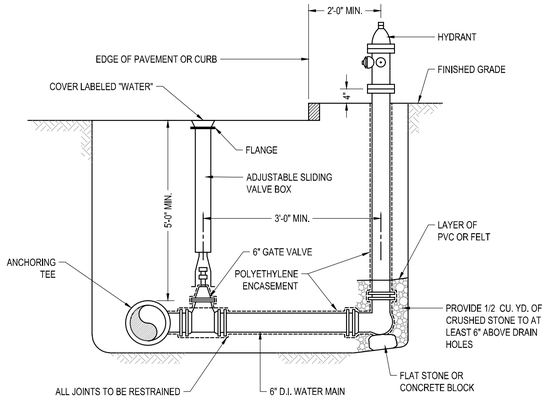

NOTE:

USE TWO 6" BENDS OR OFFSET ON LATERAL TO ACHIEVE REQUIRED HYDRANT ELEVATION IF NECESSARY.

1 HYDRANT AND VALVE DETAIL

SCALE: NTS

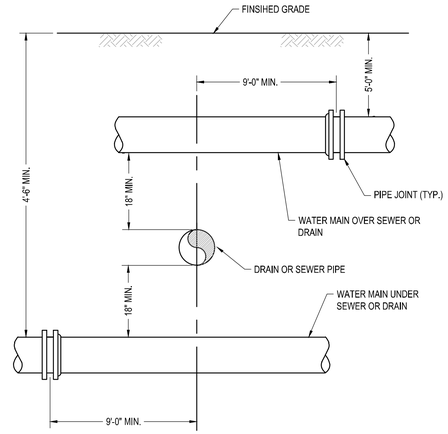

NOTES:

1. 4.5 FT OR LESS OF COVER WHEN CROSSING REQUIRES INSULATION.
2. 18-INCH OR LESS VERTICALLY FROM THE NEAREST UTILITY REQUIRES INSULATION FOR CUSHIONING.
3. IF WATER MAIN CANNOT BE INSTALLED AT A MINIMUM DEPTH OF 4'-6" OF COVER, THE CONTRACTOR TO COORDINATE WITH OWNER AND ENGINEER REGARDING THE ELEVATION AT WHICH TO CROSS UTILITY.

2 SEWER OR DRAIN CROSSING DETAIL

SCALE: NTS

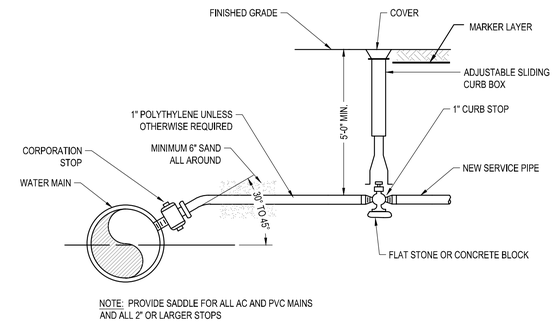

NOTE: PROVIDE SADDLE FOR ALL AC AND PVC MAINS AND ALL 2" OR LARGER STOPS

3 WATER SERVICE DETAIL

SCALE: NTS

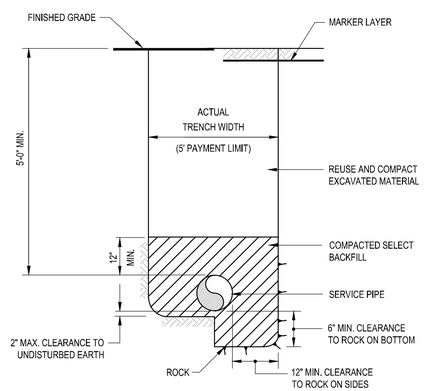

4 WATER SERVICE TRENCH DETAIL

SCALE: NTS

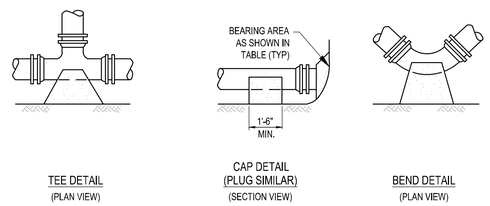

TABLE OF CONCRETE THRUST RESTRAINT MINIMUM BEARING AREAS IN SQUARE FEET AGAINST UNDISTURBED MATERIAL FOR WATER MAIN FITTINGS				
SIZE OF MAIN	90° BENDS, TEES, CAPS AND PLUGS	45° BENDS AND WYES	22-1/2° BENDS	11-1/4° BENDS
6", 8"	5	4	2	2
10", 12"	12	9	5	2

NOTES:

1. CONCRETE THRUST RESTRAINT SHALL ONLY BE USED WHERE OTHER MEANS OF RESTRAINT ARE NOT FEASIBLE.
2. CONTRACTOR SHALL USE CARE TO AVOID PLACEMENT OF CONCRETE ON THE FITTING JOINTS.

5 CONCRETE THRUST RESTRAINT FOR FITTINGS

SCALE: NTS

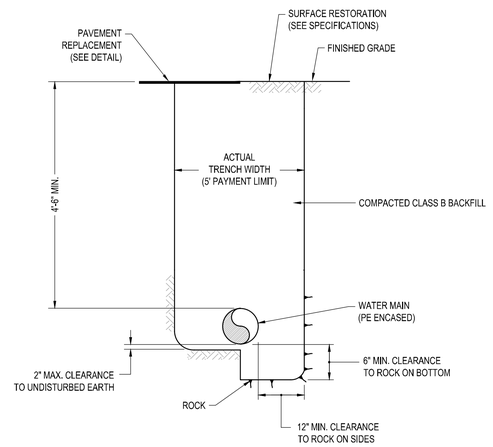

6 WATER MAIN TRENCH DETAIL

SCALE: NTS

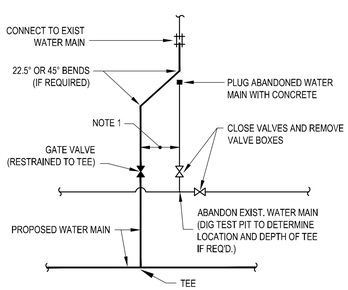

NOTE: MINIMUM PRACTICAL DISTANCE - GENERALLY NO MORE THAN 2 FT.

7 WATER MAIN LATERAL CONNECTION

SCALE: NTS

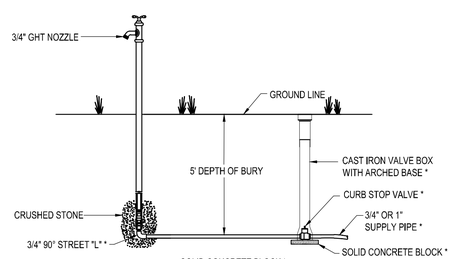

NOTE: YARD HYDRANTS SHALL BE SET IN 4 CUBIC FEET OF CRUSHED STONE TO ALLOW FOR PROPER DRAINAGE. RECOMMENDATIONS OF THE AWWA SHOULD BE FOLLOWED WHEN INSTALLING THE YARD HYDRANT.

8 YARD HYDRANT

SCALE: NTS

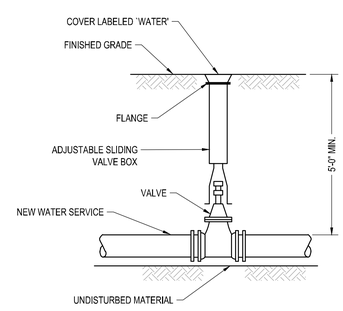

9 VALVE AND BOX DETAIL

SCALE: NTS

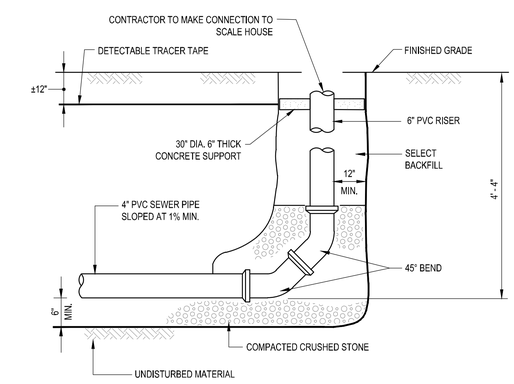

SECTION VIEW

10 SEWER CONNECTION DETAIL

SCALE: NTS

Project:

TOWN OF CHATHAM
TRANSFER STATION
REDEVELOPMENT PROJECT
97 SAM RYDER ROAD, CHATHAM MA

TOWN OF CHATHAM INCORPORATED JUNE 11 1712 MASS.

Weston & Sampson

Weston & Sampson Engineers, Inc.
55 Walkers Brook Drive, Suite 100
Reading, MA 01867
978.532.1900 800.SAMPSON
www.westonandsampson.com

Consultants:

Revisions:

No.	Date	Description

COA:

Seal:

COMMONWEALTH OF MASSACHUSETTS BRIAN J McCORMACK ENVIRONMENTAL No. 47895 REGISTERED PROFESSIONAL ENGINEER

Issued For:

BIDDING

Scale: AS NOTED

Date:	MARCH 13, 2026
Drawn By:	NWA/AS
Reviewed By:	BJM
Approved By:	BJM
W&S Project No.:	ENG25-1356
W&S File No.:	-

Drawing Title:

CONSTRUCTION DETAILS

Sheet Number:

C505

COPYRIGHT © 2026 WESTON & SAMPSON, INC.

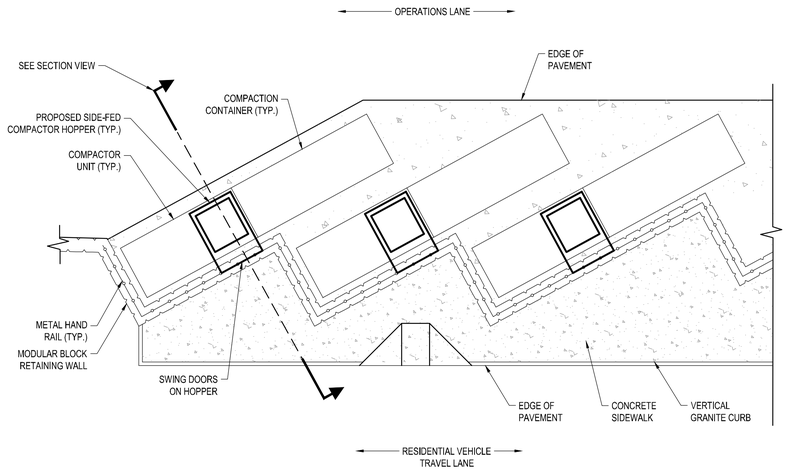

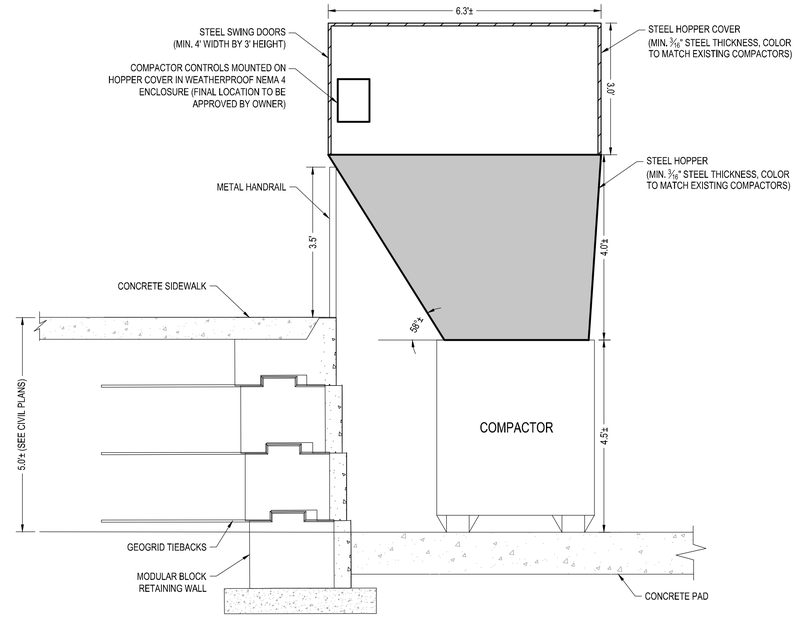

SECTION VIEW

NOTES:

1. CONTRACTOR SHALL FURNISH AND INSTALL SIX (6) NEW STEEL HOPPERS WITH STEEL SLIDING LIDS ON THE THREE (3) NEW COMPACTORS AND THREE (3) EXISTING COMPACTORS. THE CONTRACTOR SHALL COORDINATE THE HOPPER DESIGN TO FIT SEAMLESSLY WITH THE COMPACTOR CHARGE BOX. THE HOPPER AND CHARGE BOX INTERFACE SHALL BE WATERTIGHT AND FULLY SEALED. THE TOP LIP OF EACH HOPPER SHALL BE SET WITHIN 1-INCH OR LESS OF THE TOP OF THE METAL HAND RAIL LOCATED AT THE TOP OF THE RETAINING WALLS.

1 RETAINING WALL AND STEEL COMPACTOR CHUTE LAYOUT

SCALE: NTS

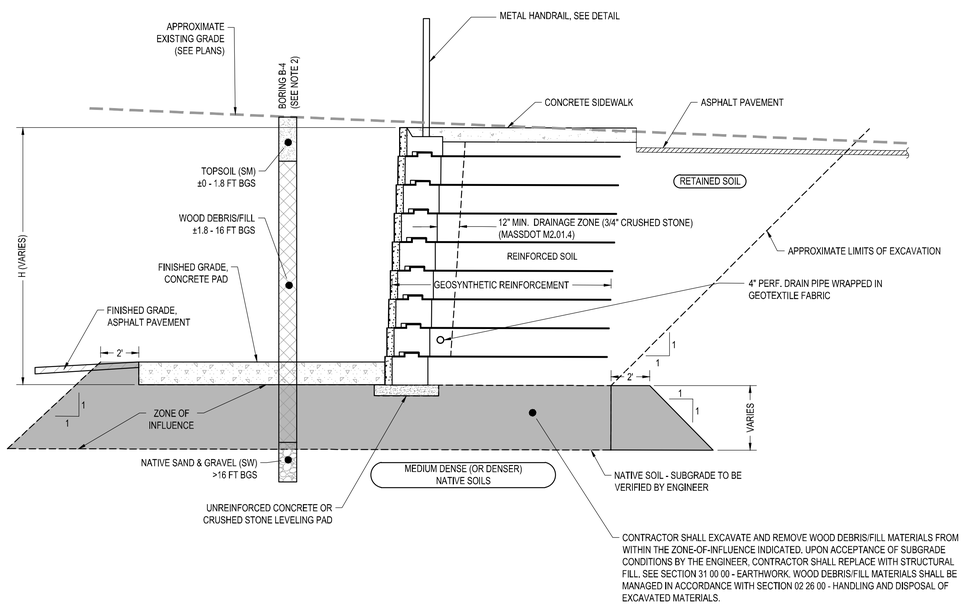

NOTES:

1) THIS TYPICAL DETAIL IS SHOW FOR ILLUSTRATIVE PURPOSES. THE CONTRACTOR SHALL SUBMIT RETAINING WALL/GEOGRID DESIGNS WHICH INCLUDE INTERNAL STABILITY CALCULATIONS AS WELL AS EXTERNAL SLIDING, OVERTURNING AND GLOBAL STATIC AND SEISMIC STABILITY CALCULATIONS, PER SPECIFICATION 32 32 23.13. THE SUBMITTAL MUST BE APPROVED BY THE ENGINEER PRIOR TO CONSTRUCTION.

2) THE SOIL LAYERS SHOWN ON THIS DETAIL REPRESENT SUBSURFACE CONDITIONS OBSERVED IN SOIL BORING B-4. THESE LAYERS ARE SHOWN FOR GRAPHICAL PURPOSES ONLY AND DO NOT REPRESENT EXISTING SUBSURFACE CONDITIONS PROXIMATE TO ALL PROPOSED RETAINING WALLS AND CONCRETE PADS. THE CONTRACTOR SHALL REFER TO SPECIFICATION SECTION 00 31 32 - SUBSURFACE DATA AND ASSOCIATED ATTACHMENTS FOR MORE INFORMATION ON SUBSURFACE CONDITIONS IN THE AREA OF PROPOSED DEVELOPMENT. THE CONTRACTOR MAY ALSO EXCAVATE TEST PITS AS NEEDED TO CONFIRM SUBSURFACE CONDITIONS.

3) THE CONTRACTOR'S SUBMITTED RETAINING WALL DESIGN SHALL INCLUDE DETAILS FOR MOUNTING THE PROPOSED HANDRAIL AT THE TOP OF THE WALL.

2 TYPICAL RETAINING WALL CROSS SECTION

SCALE: NTS

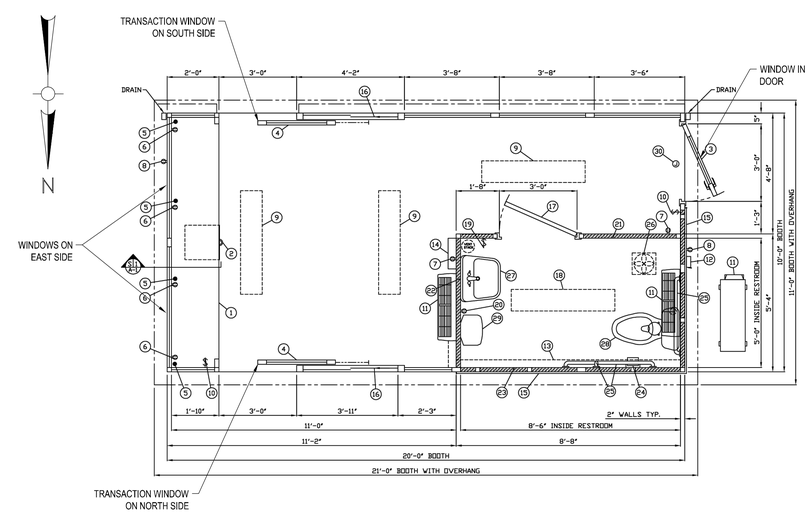

NOTE:

CONTRACTOR SHALL PROVIDE A MODULAR SCALE HOUSE TO THE APPROXIMATE DIMENSIONS AND ORIENTATION INDICATED ON THE DETAIL AND INCLUDE A RESTROOM. THE DOOR ON THE NORTHEAST CORNER OF THE SCALE HOUSE SHALL INCLUDE A WINDOW TO PROVIDE VISIBILITY TO THE EAST. THE SCALE HOUSE SHALL BE MANUFACTURED BY PAR-KUT INTERNATIONAL, INC., PORTA-KING BUILDING SYSTEMS, PANEL BUILT, INC., OR APPROVED EQUAL. CONTRACTOR SHALL SUBMIT PROPOSED SCALE HOUSE PRODUCT LITERATURE AND LAYOUT DRAWINGS IN ACCORDANCE WITH SPECIFICATION SECTION 13 34 19 - PREFABRICATED STRUCTURES.

3 MODULAR SCALE HOUSE DETAIL

SCALE: NTS

Project:
TOWN OF CHATHAM
TRANSFER STATION
REDEVELOPMENT PROJECT
97 SAM RYDER ROAD, CHATHAM MA

TOWN OF CHATHAM MASS. INCORPORATED JUNE 11 1712

Weston & Sampson
Weston & Sampson Engineers, Inc.
55 Walkers Brook Drive, Suite 100
Reading, MA 01867
978.532.1900 800.SAMPSON
www.westonandsampson.com

Consultants:

Revisions:

No.	Date	Description
1		

COA:

Seal: COMMONWEALTH OF MASSACHUSETTS BRIAN J. McCORMACK ENVIRONMENTAL No. 47895 REGISTERED PROFESSIONAL ENGINEER

Issued For: BIDDING

Scale: AS NOTED

Date: MARCH 13, 2026
Drawn By: NWA/AS
Reviewed By: BJM
Approved By: BJM
W&S Project No.: ENG25-1356
W&S File No.: -

Drawing Title: CONSTRUCTION DETAILS

Sheet Number: C506

COPYRIGHT © 2026 WESTON & SAMPSON, INC.

P:\Chatham MA25-1356 - Transfer Station Redevelopment\ENGINEERING\25-C-A-Survey\05 - Sheets\C506 - CONSTRUCTION DETAILS.dwg

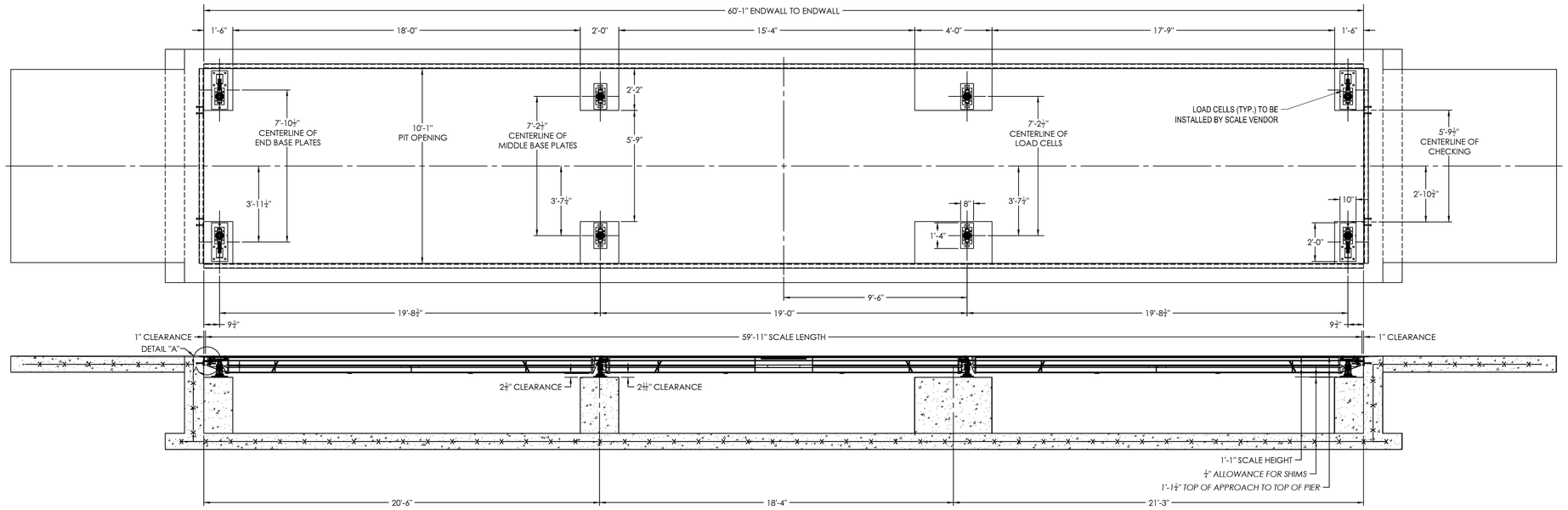

NOTES:

1. FOUNDATION SHALL BE INSTALLED TO ENSURE PROPER DRAINAGE AWAY FROM SCALE. SCALE PIT DRAINAGE SHALL BE TIED INTO PROPOSED DRAINAGE SYSTEM AS INDICATED ON THE CIVIL DRAWINGS.
2. PIERS SHALL BE LEVEL AND IN THE SAME PLANE WITHIN +/- 1/8".
3. FOUNDATION TOLERANCES:
   WIDTH: +1/4", -0"
   LENGTH: +3/8", -0"
   HEIGHT: +1/8", -0"
4. FOUNDATION SHALL BE DESIGNED TO ACCOMMODATE A TOTAL SCALE CAPACITY OF 270,000 LBS AND INDIVIDUAL LOAD CELL CAPACITY OF 77,000 LBS EACH.
5. CONTRACTOR SHALL INSTALL STEEL COPING ON EACH END WALL AS REQUIRED BY SCALE VENDOR. SEE DETAIL A.
6. STEEL REINFORCEMENT SHALL BE DESIGNED BY CONTRACTOR'S MASSACHUSETTS LICENSED STRUCTURAL ENGINEER. REINFORCING STEEL TO CONFORM TO ASTM A615 GRADE 60 SPECIFICATIONS.
7. CONCRETE SHALL BE MINIMUM 4,000 PSI COMPRESSIVE STRENGTH.
8. APPROXIMATE CONCRETE REQUIREMENTS:
   FLOOR SLAB: 25 CUBIC YARDS
   END WALLS: 2.5 CUBIC YARDS
   SIDE WALLS: 20 CUBIC YARDS
   APPROACH SLABS: 6.25 CUBIC YARDS
   PIERS: 2.75 CUBIC YARDS
9. WEIGHT OF LARGEST BRIDGE MODULE: 8,250 LBS

1 TRUCK SCALE PIT LAYOUT
SCALE: NTS

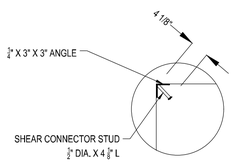

2 DETAIL A
SCALE: NTS

Project:
TOWN OF CHATHAM
TRANSFER STATION
REDEVELOPMENT PROJECT
97 SAM RYDER ROAD, CHATHAM MA

TOWN OF CHATHAM MASS. INCORPORATED JUNE 11 1712

Weston & Sampson
Weston & Sampson Engineers, Inc.
55 Walkers Brook Drive, Suite 100
Reading, MA 01867
978.532.1900 800.SAMPSON
www.westonandsampson.com

Consultants:

Revisions:

No.	Date	Description
1		

COA:

Seal:
COMMONWEALTH OF MASSACHUSETTS
BRIAN J. McCORMACK
ENVIRONMENTAL
No. 47895
REGISTERED PROFESSIONAL ENGINEER

Issued For:
BIDDING

Scale: AS NOTED

Date:	MARCH 13, 2026
Drawn By:	NWA/AS
Reviewed By:	BJM
Approved By:	BJM
W&S Project No.:	ENG25-1356
W&S File No.:	-

Drawing Title:
CONSTRUCTION DETAILS

Sheet Number:
C507

COPYRIGHT © 2026 WESTON & SAMPSON, INC.

1.0 - GENERAL

1.01 THE STRUCTURAL DRAWINGS SHALL BE USED IN CONJUNCTION WITH ALL OTHER CONTRACT DRAWINGS AND SPECIFICATIONS. REFER TO CIVIL, ARCHITECTURAL, MECHANICAL, PLUMBING, AND ELECTRICAL DRAWINGS FOR LOCATION, DIMENSIONS, AND DETAILS OF OPENINGS, SLEEVES, EMBEDMENTS, INSERTS, PADS, CURBS, DEPRESSIONS, ANCHOR BOLTS, AND OTHER PROJECT REQUIREMENTS NOT SHOWN ON STRUCTURAL DRAWINGS.

1.02 THE CONTRACTOR IS RESPONSIBLE FOR CHECKING, COORDINATING AND VERIFYING ALL DIMENSIONS IN THE FIELD PRIOR TO COMMENCING WORK. THE CONTRACTOR SHALL IMMEDIATELY REPORT ANY DISCREPANCY TO THE ARCHITECT AND ENGINEER AS A REQUEST FOR INFORMATION (RFI) BEFORE PROCEEDING WITH WORK.

1.03 THE CONTRACTOR IS RESPONSIBLE FOR VERIFYING IN THE FIELD THE EXISTENCE AND LOCATION OF OVERHEAD, BURIED AND/OR EMBEDDED UTILITIES, AND DETERMINING LOCATIONS OF ALL EMBEDDED MECHANICAL, ELECTRICAL AND PLUMBING SYSTEMS AFFECTED BY THE WORK OF THIS CONTRACT.

1.04 ALL WORK IS TO CONFORM WITH THE FOLLOWING CODES AND STANDARDS:

(A) "780 CMR: MASSACHUSETTS AMENDMENTS MASSACHUSETTS STATE BUILDING CODE" - 10TH EDITION (MSBC)
(B) INTERNATIONAL BUILDING CODE, (IBC 2021)
(C) "BUILDING CODE REQUIREMENTS FOR STRUCTURAL CONCRETE" - AMERICAN CONCRETE INSTITUTE (ACI 318)
(G) "MINIMUM DESIGN LOADS FOR BUILDINGS AND OTHER STRUCTURES" - AMERICAN SOCIETY OF CIVIL ENGINEERS, (ASCE 7-16)

FOR ADDITIONAL CODES AND STANDARDS REFER TO SPECIFICATIONS.

1.05 THE CONTRACTOR SHALL NOTIFY THE ARCHITECT AND ENGINEER OF UNFORESEEN CONDITIONS THAT MAY BE UNCOVERED DURING DEMOLITION AND CONSTRUCTION AS A REQUEST FOR INFORMATION (RFI) BEFORE PROCEEDING WITH WORK.

1.06 PERMANENT STRUCTURAL ELEMENTS TO BE DESIGNED IN ACCORDANCE WITH PERFORMANCE SPECIFICATIONS INCLUDE, BUT ARE NOT LIMITED TO, THE FOLLOWING:

(A) PRE-FABRICATED BUILDING
(B) MISC. MECHANICAL AND ELECTRICAL COMPONENT AND SYSTEM SEISMIC SUPPORTS
(C) LIGHT GAUGE COLD FORMED STEEL FRAMING

FOR PERFORMANCE DESIGN REQUIREMENTS OF ELEMENTS LISTED ABOVE, REFER TO ADDITIONAL NOTES ON THESE SHEETS AND IN THE TECHNICAL SPECIFICATIONS. ALL DESIGN SUBMITTAL DRAWINGS AND CALCULATIONS SHALL BE CERTIFIED, SIGNED AND SEALED BY A PROFESSIONAL STRUCTURAL ENGINEER REGISTERED IN THE STATE OF MASSACHUSETTS.

1.07 STRUCTURAL REQUIREMENTS TO ACCOMMODATE FIXED EQUIPMENT, INCLUDING BUT NOT LIMITED TO ROOF TOP UNITS ARE INCIDENTAL TO THE REQUIREMENTS OF A SPECIFIC EQUIPMENT MANUFACTURER. ALL WORK SHALL CONFORM TO APPROVED EQUIPMENT MANUFACTURER'S SHOP DRAWINGS AND INSTALLATION INSTRUCTIONS. THE CONTRACTOR SHALL SUBMIT TO THE ENGINEER FOR APPROVAL ANY REQUIRED MODIFICATIONS TO ACCOMMODATE APPROVED EQUIPMENT DRAWINGS. SUCH MODIFICATIONS SHALL BE MADE AT NO COST TO THE OWNER.

1.08 DETAILS AND NOTES SHOWN ON STRUCTURAL DRAWINGS SHALL BE APPLICABLE TO ALL PARTS OF THE STRUCTURAL WORK EXCEPT WHERE SPECIFICALLY REQUIRED OTHERWISE BY CONTRACT DOCUMENTS. CONDITIONS NOT SPECIFICALLY SHOWN SHALL BE SIMILAR TO THOSE SHOWN FOR LIKE CONDITIONS AS DETERMINED BY THE ENGINEER.

1.09 IN ACCORDANCE WITH SPECIFICATION SECTION 01 45 23, TESTING AND INSPECTION OF STRUCTURAL WORK SHALL BE THE RESPONSIBILITY OF THE CONTRACTOR. THE COSTS FOR TESTING AND INSPECTIONS WILL BE PAID BY THE CONTRACTOR. PROVIDE TEST RESULTS TO THE ENGINEER IN A TIMELY MANNER.

1.10 THE CONTRACTOR SHALL DESIGN AND PROVIDE ALL REQUIRED SHORING AND TEMPORARY BRACING TO RESIST FORCES ON THE STRUCTURE THROUGHOUT THE CONSTRUCTION PERIOD.

2.0 - FOUNDATIONS

2.01 THE SUBSURFACE CONDITIONS DESCRIBED IN THE DRAWINGS, SPECIFICATIONS, TEST BORINGS AND TEST PITS ARE INCLUDED ONLY TO ASSIST THE CONTRACTOR DURING BIDDING AND SUBSEQUENT CONSTRUCTION AND REPRESENT CONDITIONS ONLY AT THESE SPECIFIC LOCATIONS AT THE TIME THEY ARE MADE.

2.02 THE CONTRACTOR SHALL DESIGN AND PROVIDE ALL TEMPORARY EARTH SUPPORT, SHORING AND BRACING REQUIRED TO PERFORM THE WORK IN ACCORDANCE WITH OSHA, STATE AND LOCAL REQUIREMENTS.

2.03 THE CONTRACTOR SHALL DESIGN AND PROVIDE SHEETING, SHORING, BRACING, AND/OR UNDERPINNING IN ORDER TO PROTECT EXISTING UTILITIES FROM EXCESSIVE MOVEMENTS DURING THE CONSTRUCTION PERIOD, IN ACCORDANCE WITH OSHA, STATE & LOCAL REQUIREMENTS.

2.04 THE CONTRACTOR SHALL CARRY OUT CONTINUOUS CONTROL OF SURFACE AND SUBSURFACE WATER. DEWATER ANY AREAS REQUIRING EXCAVATION IN ADVANCE OF PERFORMING EXCAVATION. MAINTAIN GROUNDWATER LEVELS AT LEAST 2 FEET BELOW PLANNED SUBGRADES.

2.05 ALL SUBGRADES TO RECEIVE FILL MATERIALS, FOUNDATIONS, SLABS OR OTHER CONSTRUCTION SHALL BE FREE OF RUNNING OR STANDING WATER PRIOR TO PLACEMENT.

2.06 FOUNDATIONS SHALL BE INSTALLED IN THE GEOMETRY SHOWN IN THE PLANS, ANY ROCK ENCOUNTERED DURING EXCAVATION SHALL BE REMOVED TO CLEAR THE REQUIRED FOUNDATION GEOMETRY.

2.07 REFER TO THE GEOTECHNICAL REPORT PREPARED BY WESTON & SAMPSON DATED 08/15/2023 FOR ADDITIONAL INFORMATION. THE MAXIMUM ALLOWABLE BEARING CAPACITY IS 2000 PSF.

3.0 - CAST IN PLACE CONCRETE

3.01 CONCRETE WORK SHALL CONFORM TO "BUILDING CODE REQUIREMENTS FOR REINFORCED CONCRETE" (ACI 318) AND "SPECIFICATIONS FOR STRUCTURAL CONCRETE FOR BUILDINGS" (ACI 301).

3.02 CONCRETE SHALL BE CONTROLLED CONCRETE, PROPORTIONED, MIXED AND PLACED IN THE PRESENCE OF A REPRESENTATIVE OF AN APPROVED TESTING AGENCY.

3.03 UNLESS NOTED OTHERWISE, CONCRETE SHALL BE NORMAL WEIGHT AND HAVE A MINIMUM 28 DAY COMPRESSIVE STRENGTH AS FOLLOWS:

(A) FOUNDATIONS: 4500 PSI
(B) INTERIOR SLABS-ON-GRADE, KNEEWALLS, CURBS, AND EQUIPMENT PADS: 4500 PSI
(C) EXTERIOR SLABS AND WALKWAYS: 5000 PSI

3.04 ALL PERMANENTLY EXPOSED VERTICAL AND HORIZONTAL CONCRETE SURFACES SHALL BE TREATED OR SEALED IN ACCORDANCE WITH PROJECT SPECIFICATIONS.

3.05 CONCRETE WORK SHALL BE COORDINATED WITH ALL PRE-FABRICATED BUILDINGS, CIVIL, MECHANICAL, PLUMBING, ELECTRICAL WORK, AND ALL EQUIPMENT. THE CONTRACTOR SHALL VERIFY INSTALLATION AND LOCATIONS OF ALL EMBEDDED ITEMS INCLUDING BUT NOT LIMITED TO INSERTS, ANCHOR BOLTS, DOWELS, BLOCKOUTS, SLEEVES, EMBEDDED PIPING, AND EMBEDDED CONDUIT PRIOR TO CONCRETE PLACEMENT.

3.06 FOR STRUCTURAL ELEMENTS, THE LOCATIONS AND MAXIMUM SPACING OF VERTICAL JOINTS SHALL BE AS FOLLOWS:

ELEMENT	JOINT TYPE	SPACING, FT.
FOUNDATION WALL	CONTRACTION	30
FOUNDATION WALL	CONSTRUCTION	60

3.07 FOR SLABS-ON-GRADE, LOCATE CONSTRUCTION OR CONTROL JOINTS ALONG COLUMN LINES OR AS SHOWN. PROVIDE JOINTS AT 20FT. MAX. SPACING. SUBMIT JOINT LOCATIONS AND DETAILS FOR APPROVAL.

3.08 SEALANT FOR CONTROL/CONTRACTION JOINTS AND SAW CUT JOINTS SHALL BE SIKADUR 51 MANUFACTURED BY SIKA OR AN APPROVED EQUAL.

3.09 CONCRETE EXPOSED TO WEATHER (FREEZE-THAW CONDITIONS) IN THE FINISHED PROJECT SHALL BE AIR ENTRAINED PER SPECIFICATIONS REQUIREMENTS.

3.10 A MINIMUM OF 72 HOURS SHALL ELAPSE BETWEEN ADJACENT CONCRETE PLACEMENTS.

3.11 CONCRETE SLABS SHALL BE PLACED SO THAT THE SLAB THICKNESS IS AT NO POINT LESS THAN THAT INDICATED ON THE DRAWINGS.

3.12 PROVIDE A 3/4" CHAMFER ON ALL VERTICAL AND HORIZONTAL CORNERS EXPOSED TO VIEW UNLESS NOTED OTHERWISE.

3.13 ALL CONCRETE SHALL BE WATER CURED UNLESS OTHERWISE AUTHORIZED BY THE ENGINEER.

3.14 NON-SHRINK, NON-METALLIC, GROUT SHALL HAVE A MINIMUM 28-DAY COMPRESSIVE STRENGTH OF 7,500 PSI (ASTM C942) AND A MINIMUM BOND STRENGTH OF 2,000 PSI AT 28-DAYS (ASTM C882). GROUT MAY BE EXTENDED WITH COARSE AGGREGATE PER THE MANUFACTURER'S RECOMMENDATIONS.

3.15 WHEN NEW CONCRETE IS CAST AGAINST EXISTING CONCRETE SURFACES, UNLESS NOTED OTHERWISE, THE EXISTING CONCRETE SHALL BE ROUGHENED TO 1/4" AMPLITUDE, THOROUGHLY CLEANED BY POWER WASHING OR OTHER MEANS, AND BE A SATURATED SURFACE DRY CONDITION IMMEDIATELY PRIOR TO PLACING CONCRETE.

4.0 - POST INSTALLED CONCRETE ANCHORS AND REINFORCING DOWELS

4.01 ADHESIVE ANCHORS AND REINFORCING DOWELS SHALL BE HILTI HIT-HY-200 ADHESIVE ANCHORING SYSTEM OR APPROVED EQUAL.

4.02 EXPANSION ANCHORS SHALL BE HILTI KWIK BOLT TZ EXPANSION ANCHORS OR APPROVED EQUAL.

4.03 INSTALL ANCHORS IN STRICT CONFORMANCE WITH THE MANUFACTURER'S REQUIREMENTS.

4.04 HOLES SHALL BE THOROUGHLY CLEANED AND DRY PRIOR TO INSTALLING ANCHORS.

4.05 DO NOT DAMAGE EXISTING REINFORCING. LOCATE REINFORCING WITH PROFOMETER OR OTHER MEANS PRIOR TO DRILLING CONCRETE.

4.06 ANCHORS INSTALLED OVERHEAD SHALL BE PROOF TESTED BY THE MANUFACTURER'S FIELD ENGINEER OR OTHER APPROVED AGENCY. PROOF TEST A MINIMUM OF 25% OF THE ANCHORS OR (2) TOTAL, WHICHEVER IS GREATER.

4.07 POST INSTALLED ANCHORS SHALL ONLY BE USED WHERE SHOWN IN STRUCTURAL DRAWINGS.

5.0 - CAST IN PLACE CONCRETE REINFORCEMENT

5.01 REINFORCEMENT DETAILING, FABRICATION, AND ERECTION SHALL CONFORM TO "ACI DETAILING MANUAL" - SP-66, "CRSI MANUAL OF STANDARD PRACTICE".

5.02 STEEL REINFORCEMENT, UNLESS NOTED OTHERWISE, SHALL CONFORM TO ASTM A615 GRADE 60.

5.03 REINFORCING STEEL SHALL BE UNCOATED AND DEFORMED.

5.04 MINIMUM CONCRETE PROTECTIVE COVERING FOR REINFORCEMENT, UNLESS REQUIRED FOR FIRE PROTECTION OR NOTED OTHERWISE, SHALL BE AS FOLLOWS:

(A) CONCRETE CAST AGAINST AND PERMANENTLY EXPOSED TO EARTH:_____3"
(B) CONCRETE EXPOSED TO EARTH OR WEATHER:_____2"

5.05 REINFORCING STEEL SHALL BE CONTINUOUS THROUGH ALL CONSTRUCTION JOINTS, CORNERS, AND INTERSECTIONS UNLESS OTHERWISE NOTED. REINFORCING SHALL BE LAPPED AT NECESSARY SPLICES OR HOOKED AT DISCONTINUOUS ENDS, UNLESS OTHERWISE NOTED.

5.06 FOR REINFORCING STEEL SPLICE LAP LENGTHS REFER TO THE TABLE PROVIDED UNLESS OTHERWISE INDICATED.

5.07 MECHANICAL SPLICES SHALL BE PERMITTED SUBJECT TO APPROVAL BY THE ENGINEER. MECHANICAL SPLICES SHALL DEVELOP AT LEAST 125 PERCENT OF THE SPECIFIED YIELD STRENGTH OF THE BAR. NO WELDED CONNECTIONS ARE PERMITTED.

5.08 REINFORCEMENT SHALL NOT BE TACK WELDED.

5.09 NOTIFY THE TESTING LAB AND ENGINEER A MINIMUM OF 48 HOURS PRIOR TO SCHEDULED CONCRETE PLACEMENT IN ORDER TO ACCOMMODATE INSPECTION OF REINFORCEMENT AND CONCRETE TESTING. NO CONCRETE SHALL BE PLACED WITHIN 48 HOURS OF SUCH NOTIFICATION.

5.10 WHERE REINFORCEMENT IS NOT SHOWN ON DRAWINGS, PROVIDE REINFORCEMENT IN ACCORDANCE WITH APPLICABLE DETAILS AS DETERMINED BY THE ARCHITECT AND ENGINEER. IN NO CASE SHALL REINFORCEMENT BE LESS THAN THE MINIMUM REINFORCEMENT PERMITTED BY THE CODES, NOR LESS THAN THE FOLLOWING:

(D) STRUCTURAL SLABS: 0.0020 X GROSS CONCRETE AREA IN EACH DIRECTION
(E) CONCRETE WALLS: 0.0025 X GROSS CONCRETE AREA IN EACH DIRECTION

5.11 WHERE REINFORCEMENT IS REQUIRED IN SECTION, REINFORCEMENT IS CONSIDERED TYPICAL WHEREVER THE SECTIONS APPLIES.

5.12 DOWELS SHALL MATCH BAR SIZE, NUMBER AND SPACING, UNLESS NOTED OTHERWISE.

COMPONENTS AND CLADDING WIND PRESSURE LOADS ON BUILDING

EFFECTIVE WIND AREA (SF)	ROOF LOADS (psf)						WALL LOADS (psf)			
	ZONE 1		ZONE 2		ZONE 3		ZONE 4		ZONE 5	
	POS	NEG	POS	NEG	POS	NEG	POS	NEG	POS	NEG
10	17.3	-68.0	17.3	-89.7	17.3	-122.2	42.7	-46.2	42.7	-57.1
50	14.9	-57.6	14.9	-76.2	14.9	-95.5	38.2	-41.9	38.2	-48.2
100	13.8	-53.1	13.8	-70.5	13.8	-83.9	36.3	-39.9	36.3	-44.4
500	13.8	-53.1	13.8	-70.5	13.8	-83.9	36.3	-39.9	36.3	-44.4

NOTE(S):

(A) POS - INDICATES POSITIVE PRESSURE (INWARD OR TOWARD THE SURFACES)
(B) NEG - INDICATES NEGATIVE PRESSURE (OUTWARD OR AWAY FROM SURFACES)

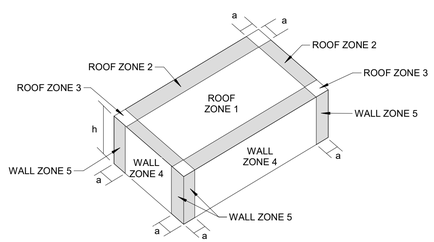

NOTE(S):

1. MINIMUM PRESSURE ON ANY SURFACE SHALL BE 16 PSF.
2. TABLE PRESSURES ARE FOR SQUARE FOOT [SF] TRIBUTARY AREA, FOR OTHER AREAS LINEAR INTERPOLATION BETWEEN AREAS ABOVE.
3. POSITIVE PRESSURES ACT TOWARDS THE BUILDING, NEGATIVE ACT AWAY FROM THE BUILDING.
4. ADJUSTMENT FACTOR FOR BUILDING HEIGHT AND EXPOSURE = 1.00
5. a =
6. DETAIL IS APPLICABLE FOR ROOF SLOPES x˚ < θ < xx˚

TENSION DEVELOPMENT & SPLICE LENGTHS FOR BARS

	F'c = 4,500 PSI		F'c = 5,000 PSI	
BAR SIZE	TOP BARS (IN.)	OTHER BARS (IN.)	TOP BARS (IN.)	OTHER BARS (IN.)
#3	23	18	22	17
#4	31	24	29	22
#5	38	30	36	28
#6	46	35	43	33

6.0 - DESIGN LOADS:

6.01 GENERAL DESIGN REQUIREMENTS_____(IBC 2021, SECTION 1604)
(A) RISK CATEGORY_____II (ASCE 7-16, TABLE 1.5-1)
(B) MUNICIPALITY_____CHATHAM, MA (MSBC 780 CMR, TABLE 1604.11)

6.02 DEAD LOADS
(A) SELF-WEIGHT OF PREFABRICATED BUILDING_____10,000 LB
*VERIFY WITH APPROVED SHOP DRAWINGS
(B) SUPERIMPOSED DEAD LOAD OF ACTUAL EQUIPMENT WEIGHT
(1) TRASH COMPACTOR_____8,000 LB
*VERIFY WITH APPROVED SHOP DRAWINGS
(2) OTHER PERMANENT EQUIPMENT, VERIFY WITH MANUFACTURER AND APPROVED SHOP DRAWINGS

6.03 LIVE LOADS_____(IBC 2021, SECTION 1606 & 1607)
(A) FLOOR LIVE LOADS (BUILDING SLAB)_____50 PSF
(B) ROOF LIVE LOADS_____20 PSF, 300 LB
(C) LIVE LOAD (EXTERIOR SLAB)_____250 PSF

6.04 ROOF SNOW LOAD_____(MSBC 780 CMR, TABLE 1604.11)

(A) GROUND SNOW LOAD, Pg_____25 PSF (MSBC 780 CMR, TABLE 1604.11)
(B) MINIMUM FLAT ROOF SNOW LOAD, Pf _____25 PSF (MSBC 780 CMR, TABLE 1604.11)
(C) SNOW EXPOSURE FACTOR, Ce_____1.1 (ASCE 7-16, TABLE 7.3-1)
(D) THERMAL FACTOR, Ct_____1.0 (ASCE 7-16, TABLE 7.3-2)
(E) SNOW LOAD IMPORTANCE FACTOR, Is_____1.0 (ASCE 7-16, TABLE 1.5-2)
(F) ROOF SLOPE FACTOR, Cs_____1.0 (ASCE 7-16, FIGURE 7.4-1)
(G) * ADJUST FOR SNOW DRIFT AND UNBALANCED SNOW LOADING

6.05 WIND LOADS_____(MSBC 780 CMR, TABLE 1604.11)

(A) BASIC WIND SPEED, V (3-SECOND GUST WIND SPEED)_____140 MPH (MSBC 780 CMR, TABLE 1604.11)
(B) BUILDING ENCLOSURE CLASSIFICATION_____ENCLOSED (ASCE 7-16, SEC. 26.2)
(C) WIND EXPOSURE CATEGORY_____C (ASCE 7-16, SEC. 26.7.3)
(D) DESIGN BUILDING DIMENSIONS_____20'-0" X 10'-0"
*VERIFY WITH APPROVED SHOP DRAWINGS
(E) COMPONENTS AND CLADDING_____(ASCE 7-16, CHAPTER 30)
(1) ANALYSIS PROCEDURE_____LOW RISE BUILDINGS (ASCE 7-16, PART 1)
(a) WIND DIRECTIONALITY FACTOR, Kd_____0.85 (ASCE 7-16, TABLE 26.6-1)
(b) TOPOGRAPHIC FACTOR, Kzt_____1.0 (ASCE 7-16, FIGURE 26.8-1)
(c) VELOCITY PRESSURE COEFFICIENT, Kz & Kh_____0.85 (ASCE 7-16, TABLE 26.10-1)
(d) INTERNAL PRESSURE COEFFICIENT, GCpi_____+/-0.18 (ASCE 7-16, TABLE 26.13-1)
(e) PERIMETER ZONE, a _____VARIES

6.06 EARTHQUAKE LOADS_____(MSBC 780 CMR, TABLE 1604.11)
(A) SITE CLASS_____E (WESTON & SAMPSON GEOTECHNICAL REPORT, 08/15/2023)
(B) SPECTRAL RESPONSE ACCELERATIONS
(1) Ss_____0.135 (MSBC 780 CMR, TABLE 1604.11)
(2) S1_____0.051 (MSBC 780 CMR, TABLE 1604.11)
(C) SPECTRAL RESPONSE COEFFICIENTS
(1) Sds_____0.152 (ASCE 7-16, SEC. 11.4.5)
(2) Sd1_____0.075 (ASCE 7-16, SEC. 11.4.5)
(D) SEISMIC DESIGN CATEGORY_____C (ASCE 7-16, SEC 11.6)
(E) SEISMIC IMPORTANCE FACTOR, Ie_____1.0 (ASCE 7-16, TABLE 11.5-1)
(F) SEISMIC FORCE RESISTING SYSTEM:_____(ASCE 7-16, TABLE 12.2-1)
(1) LIGHT-FRAME WALLS WITH SHEAR PANELS OF ALL OTHER MATERIALS
(a) RESPONSE MODIFICATION COEFFICIENT, R____2
(b) SYSTEM OVERSTRENGTH PARAMETER, Ωo____2.5
(c) DEFLECTION AMPLIFICATION FACTOR, Cd____2

(G) ANALYSIS PROCEDURE_____EQUIVALENT LATERAL FORCE ANALYSIS (ASCE 7-16, SEC. 12.8)

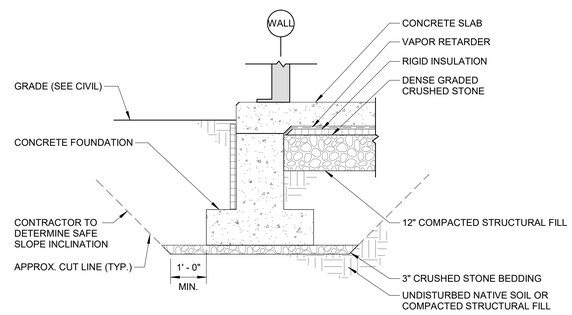

FOUNDATION NOTE(S):

1. UNDOCUMENTED FILL AND LOOSE OR DISTURBED SOILS SHALL BE REMOVED FROM ALL FOUNDATION AREAS. THE CONTRACTOR SHALL CONTACT THE ENGINEER PRIOR TO FOUNDATION CONSTRUCTION TO OBSERVE ALL FOUNDATION SUBGRADES. REFER TO EARTHWORK SPECIFICATION FOR LIMITS OF UNSUITABLE SOILS REMOVAL AND BACKFILL REQUIREMENTS BELOW FOUNDATIONS AND SLABS.
2. 3-INCHES OF CRUSHED STONE SHALL BE PLACED AND COMPACTED AT THE BASE OF FOOTING EXCAVATIONS.
3. THE CONTRACTOR IS RESPONSIBLE FOR SUBGRADE PROTECTION.
4. SUBGRADES SHALL BE PROOF ROLLED USING A FULLY LOADED 10-WHEELED DUMP TRUCK. REFER TO GEOTECHNICAL REPORT FOR OTHER PROOF ROLLING REQUIREMENTS.

SLAB NOTE(S):

1. A MINIMUM OF 12-INCHES OF DENSE GRADED CRUSHED STONE SHALL BE PLACED BELOW SLABS. REFER TO EARTHWORK SPECIFICATION FOR PLACEMENT AND COMPACTION REQUIREMENTS. THE CONTRACTOR SHALL CONTACT THE ENGINEER PRIOR TO PLACEMENT TO EVALUATION SUBGRADE CONDITIONS.
2. REFER TO EARTHWORK SPECIFICATION FOR LIMITS OF UNSUITABLE SOILS REMOVAL AND BACKFILL REQUIREMENTS BELOW FOUNDATIONS AND SLABS.
3. IF UNDERSLAB STONE IS TRAPPING WATER, THE WATER SHALL BE REMOVED PRIOR TO SLAB PLACEMENT.
4. SUBGRADES SHALL BE PROOF ROLLED USING A FULLY LOADED 10-WHEELED DUMP TRUCK. REFER TO GEOTECHNICAL REPORT FOR OTHER PROOF ROLLING REQUIREMENTS.
5. UNDERSLAB INSULATION SHALL BE 2" THICK FOAMULAR EXTRUDED POLYSTYRENE (400 SERIES) INSULATION OR APPROVED EQUAL.

1 TYPICAL CUT/FILL DETAIL

SCALE: 1/2" = 1'-0"

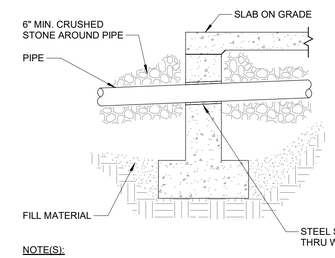

NOTE(S):

1. PIPE SHALL NOT PASS UNDER OR THROUGH WALL FOOTING. LOWER FOOTING BY STEPPING TO AVOID INTERFERENCE.

2 PIPE THROUGH FOUNDATION WALL

SCALE: 3/4" = 1'-0"

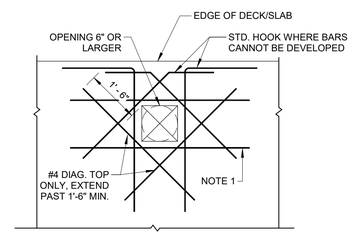

NOTE(S):

1. #5 ADD'L EACH FACE MIN; BUT NOT LESS THAN 50% OF INTERRUPTED WALL REINF EACH SIDE OF OPENING. SPACE BARS AT 3" O.C. EACH FACE. PROVIDE AT TOP AND BOTTOM MAT AS APPLICABLE. LENGTH OF ADD'L REINF = L OR H+(2XSPLICE LENGTH).
2. SEE TABLE FOR MINIMUM SPLICE LENGTH.

3 SUPPLEMENTAL SLAB REINFORCING

SCALE: 1/2" = 1'-0"

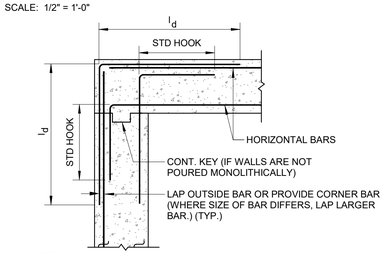

NOTE(S):

1. VERTICAL BARS NOT SHOWN FOR CLARITY. (TYP.)
2. FOR LENGTH OF ld, REFER TO SPLICE AND DEVELOPMENT LENGTH TABLE.

4 HORIZONTAL WALL CORNER REINFORCING PLAN

SCALE: 1/2" = 1'-0"

Project:
TOWN OF CHATHAM TRANSFER STATION REDEVELOPMENT PROJECT
97 SAM RYDER RD, CHATHAM, MASSACHUSETTS

TOWN OF CHATHAM INCORPORATED JUNE II 1712 MASS.

Weston & Sampson
Weston & Sampson Engineers, Inc.
55 Walkers Brook Drive, Suite 100
Reading, MA 01867
978.532.1900 800.SAMPSON
www.westonandsampson.com

Consultants:

Revisions:

No.	Date	Description

COA:

COMMONWEALTH OF MASSACHUSETTS NATHAN M. SEIFERT STRUCTURAL No. 41693 REGISTERED PROFESSIONAL ENGINEER 3/13/2026

Seal:

Issued For: BIDDING

Scale: As indicated

Key Plan:

TO CREATE KEYPLAN, EDIT THE KEYPLAN FAMILY WITHIN THE TITLEBLOCK FAMILY AND INSERT CAD TO TRACE OVER.

NORTH

Date:	3/13/2026
Drawn By:	TSM
Reviewed By:	AAC
Approved By:	NMS
W&S Project No.:	ENG25-1656
W&S File No.:	XXX

Drawing Title: GENERAL NOTES & TYPICAL DETAILS

Sheet Number: S101

C:\~RevitProjects2024\ENG25-1356 Chatham Transfer Station Redevelopment Phase I_Struct_24_Murray Timothy.rvt
3/12/2026 3:29:58 PM

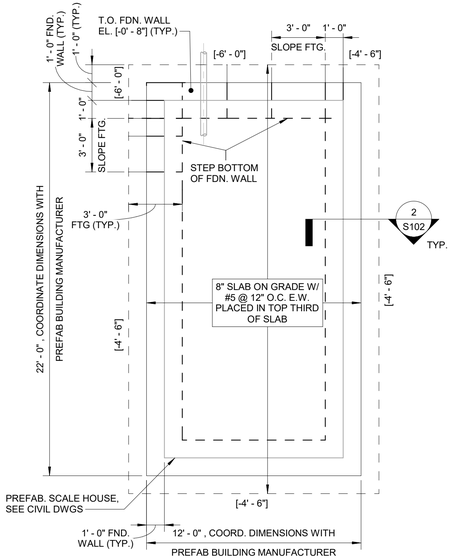

NOTES:
1. COORDINATE ALL WORK (INCLUDING, BUT NOT LIMITED TO, FLOOR ELEVATIONS, DIMENSIONS, FINISH DETAILS, PENETRATIONS, ETC.) WITH THE CIVIL, ELECTRICAL, PROCESS, PLUMBING AND MECHANICAL DRAWINGS.
2. [XX'-XX"] INDICATES BOTTOM OF FOOTING ELEVATION. ALL EXTERIOR FOOTINGS SHALL BE LOCATED A MINIMUM OF 4'-0" BELOW FINISHED GRADE.
3. A RELATIVE ELEVATION OF [0'-0"] CORRELATES WITH A PROJECT TOP OF FINISHED FLOOR ELEVATION OF 54'-6."
4. S.F. INDICATES STEP FOOTING. SEE DETAIL 3/S102

1 PREFAB SCALE HOUSE FOUNDATION PLAN
SCALE: 1/4" = 1'-0"

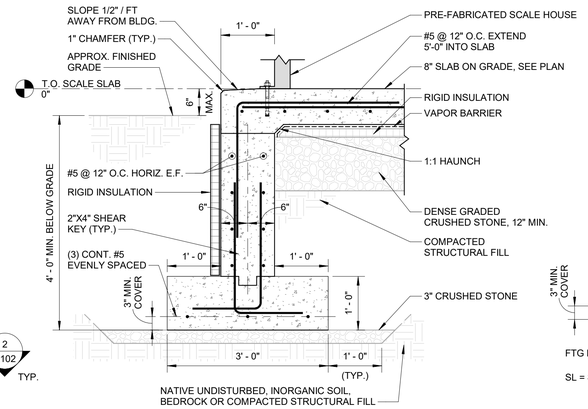

2 TYPICAL FOOTING SECTION
SCALE: 3/4" = 1'-0"

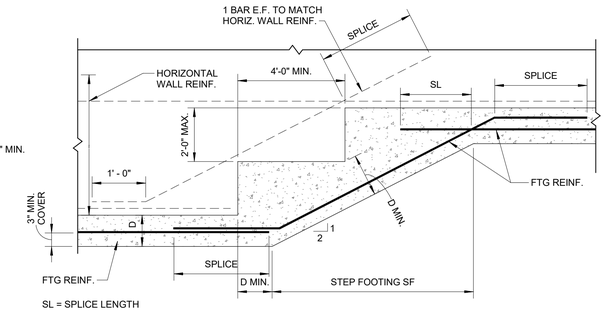

3 STEP FOOTING DETAIL
SCALE: 3/4" = 1'-0"

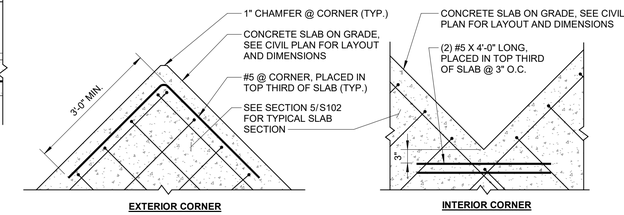

4 REINFORCING @ COMPACTOR PAD CORNERS
SCALE: 3/4" = 1'-0"

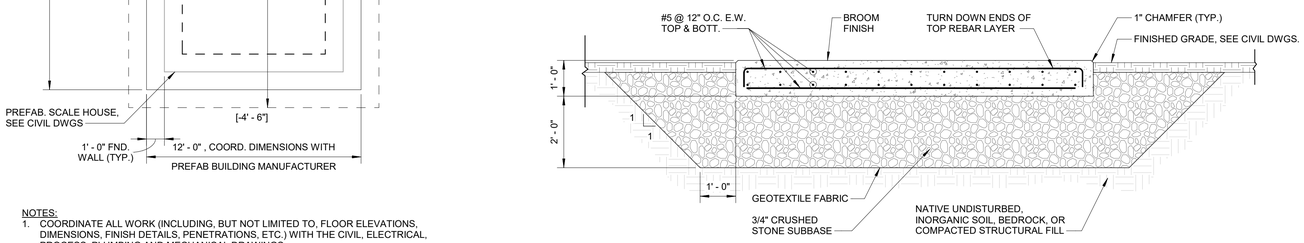

NOTES:
1. THE EXACT SIZE, SHAPE AND LOCATION OF COMPACTOR PAD(S) SHALL BE DETERMINED BY THE CONTRACTOR AFTER APPROVAL OF SHOP DRAWINGS FOR EQUIPMENT. ANCHOR BOLTS, WHERE REQUIRED, SHALL BE SIZED AND LOCATED ACCORDING TO THE MANUFACTURER'S REQUIREMENTS.
2. SLOPE PAD(S) TO DRAIN. COORDINATE WITH SITE/CIVIL DGWS.

5 TYPICAL CONCRETE COMPACTOR PAD SECTION
SCALE: 1/2" = 1'-0"

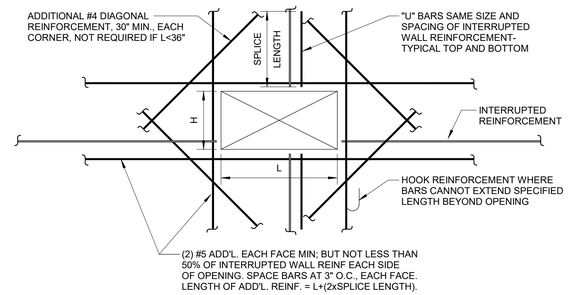

NOTES:
1. WALL OPENINGS SHALL BE COORDINATED AND DETAILED ON THE REINFORCEMENT SHOP DRAWINGS.

6 REINFORCMENT AT OPENINGS IN REINFORCED CONCRETE WALLS
SCALE: 3/4" = 1'-0"

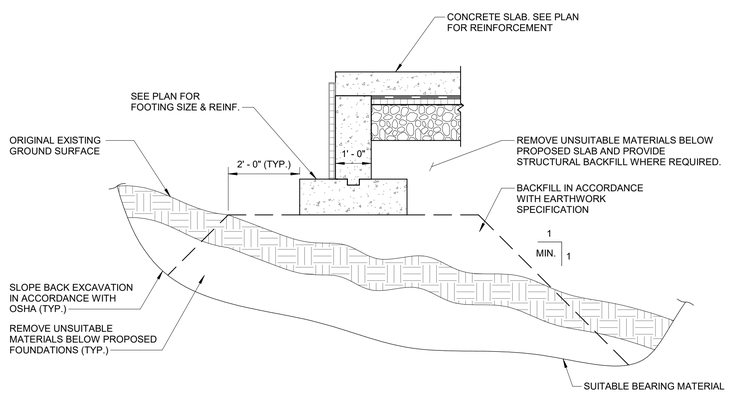

NOTES:
1. REFER TO EARTHWORK SPECIFICATION FOR DESCRIPTION OF UNSUITABLE MATERIALS AND SUITABLE BEARING MATERIAL.

7 TYPICAL REMOVAL OF UNSUITABLE MATERIALS
SCALE: 1/2" = 1'-0"

Project:
TOWN OF CHATHAM TRANSFER STATION REDEVELOPMENT PROJECT
97 SAM RYDER RD, CHATHAM, MASSACHUSETTS

TOWN OF CHATHAM INCORPORATED JUNE 11 1712 MASS.

Weston & Sampson
Weston & Sampson Engineers, Inc.
55 Walkers Brook Drive, Suite 100
Reading, MA 01867
978.532.1900 800.SAMPSON
www.westonandsampson.com

Consultants:

Revisions:

No.	Date	Description

COA:

COMMONWEALTH OF MASSACHUSETTS NATHAN M. SEIFERT STRUCTURAL No. 41693 REGISTERED PROFESSIONAL ENGINEER
3/13/2026

Seal:

Issued For: BIDDING

Scale: As indicated

Key Plan:
TO CREATE KEYPLAN, EDIT THE KEYPLAN FAMILY WITHIN THE TITLEBLOCK FAMILY AND INSERT CAD TO TRACE OVER.

NORTH

Date:	3/13/2026
Drawn By:	TSM
Reviewed By:	AAC
Approved By:	NMS
W&S Project No.:	ENG25-1656
W&S File No.:	XXX

Drawing Title:
FOUNDATION PLAN & SECTIONS

Sheet Number:
S102

3/12/2026 3:29:58 PM C:\~Revit\Projects\2024\ENG25-1356 Chatham Transfer Station Redevelopment Phase I_Struct_24_Murray Timothy.rvt

ELECTRICAL ABBREVIATIONS LIST

1P	1 POLE (2P, 3P, 4P, ETC.)	AS	AMP SWITCH	CMPR	COMPRESSOR	DS	SAFETY DISCONNECT SWITCH	FIXT	FIXTURE	HTG	HEATING	LTG	LIGHTING	MSP	MOTOR STARTER PANELBOARD	PA	PUBLIC ADDRESS	RM	ROOM	SYM	SYMMETRICAL	V	VOLT	∠	ANGLE
A	AMPERE	AT	AMP TRIP	CONN	CONNECTION	DT	DOUBLE THROW	FLR	FLOOR	HTR	HEATER	LTNG	LIGHTNING	MSBD	MAIN SWITCHBOARD	PB	PULL BOX OR PUSHBUTTON	RSC	RIGID STEEL CONDUIT	SYS	SYSTEM	VA	VOLT-AMPERES	@	AT
AC	ABOVE COUNTER OR AIR CONDITIONER	ATS	AUTOMATIC TRANSFER SWITCH	CONST	CONSTRUCTION	DWG	DRAWING	FLUOR	FLUORESCENT	HV	HIGH VOLTAGE	LV	LOW VOLTAGE	MT	MOUNT	PE	PNEUMATIC ELECTRIC	RTU	ROOF TOP UNIT	TEL	TELEPHONE	VDT	VIDEO DISPLAY TERMINAL	Δ	DELTA
		AUTO	AUTOMATIC	CONT	CONTINUATION OR CONTINUOUS	EC	ELECTRICAL CONTRACTOR	FU	FUSE	HVAC	HEATING, VENTILATING AND AIR CONDITIONING	MAX	MAXIMUM	MT.C	EMPTY CONDUIT	PED	PEDESTAL	SC	SURFACE CONDUIT	TEL,DATA	TELEPHONE/DATA	VERT	VERTICAL	'	FEET
ACLG	ABOVE CEILING	AUX	AUXILIARY	CONTR	CONTRACTOR	ELEC	ELECTRIC, ELECTRICAL	FUDS	FUSED SAFETY DISCONNECT SWITCH			MAG.S	MAGNETIC STARTER	MTS	MANUAL TRANSFER SWITCH	PF	POWER FACTOR	SEC	SECONDARY	TERM	TERMINAL	VFD	VARIABLE FREQUENCY DRIVE	"	INCHES
ADO	AUTOMATIC DOOR OPENER	AV	AUDIO VISUAL	CONV	CONVECTOR	ELEV	ELEVATOR	GA	GAUGE	HWP	HYDRONIC WATER PUMP	M/C	MOMENTARY CONTACT	MTR	MOTOR, MOTORIZED	PH	PHASE	SHT	SHEET	TL	TWIST LOCK	VOL	VOLUME	#	NUMBER
AF	AMP FRAME	AWG	AMERICAN WIRE GAUGE	CP	CIRCULATING PUMP	EM	EMERGENCY	GAL	GALLON	IC	INTERRUPTING CAPACITY	MC	MECHANICAL CONTRACTOR	N.C.	NORMALLY CLOSED	PIV	POST INDICATING VALVE	SIM	SIMILAR	TR	TAMPER RESISTANT	W	WATT	Ø	PHASE
AFF	ABOVE FINISHED FLOOR	BATT	BATTERY	CRT	CATHODE-RAY TUBE	EMS	ENERGY MANAGEMENT SYSTEM	GALV	GALVANIZED	IG	ISOLATED GROUND	MCB	MAIN CIRCUIT BREAKER	NEC	NATIONAL ELECTRICAL CODE	PNL	PANEL	S/N	SOLID NEUTRAL	T-STAT	THERMOSTAT	W/	WITH	C	CENTER LINE
AFG	ABOVE FINISHED GRADE	BD	BOARD	CT	CURRENT TRANSFORMER	EMT	ELECTRICAL METALLIC TUBING	GC	GENERAL CONTRACTOR	IMC	INTERMEDIATE METAL CONDUIT	MCC	MOTOR CONTROL CENTER	NEMA	NATIONAL ELECTRICAL MANUFACTURER'S ASSOCIATION	PP	POWER POLE	SPEC	SPECIFICATION	TTC	TELEPHONE TERMINAL CABINET	WG	WIRE GUARD	P	PLATE
AFI	ARC FAULT CIRCUIT INTERRUPTER	BLDG	BUILDING	CTR	CENTER	EP	ELECTRIC PNEUMATIC	GEN	GENERATOR	INCAND	INCANDESCENT	MDC	MAIN DISTRIBUTION CENTER			PR	PAIR	SPKR	SPEAKER	TV	TELEVISION	WH	WATER HEATER		
		BMS	BUILDING MANAGEMENT SYSTEM	CU	COPPER	EQUIP	EQUIPMENT	GFI	GROUND FAULT CIRCUIT INTERRUPTER	IR	INFRARED	MDP	MAIN DISTRIBUTION PANEL	NFDS	NON-FUSED SAFETY DISCONNECT SWITCH	PRI	PRIMARY	SP	SPARE	TVTC	TELEVISION TERMINAL CABINET	W/O	WITHOUT		
AHU	AIR HANDLING UNIT	C	CONDUIT	DCP	DOMESTIC WATER CIRCULATING PUMP	EWC	ELECTRIC WATER COOLER	GFP	GROUND FAULT PROTECTOR	IW	INTERLOCK WITH	MFR	MANUFACTURER			PROJ	PROJECTION	SR	SURFACE RACEWAY	TYP	TYPICAL	WP	WEATHERPROOF		
AL	ALUMINUM	CAB	CABINET			EXIST	EXISTING	GND	GROUND	J-BOX	JUNCTION BOX	MFS	MAIN FUSED DISCONNECT SWITCH	N/C	NOT IN CONTRACT	PRV	POWER ROOF VENTILATOR	SS	STAINLESS STEEL	UC	UNDER COUNTER	XFMR	TRANSFORMER		
ALT	ALTERNATE	CAT	CATALOG	DEPT	DEPARTMENT	EXH	EXHAUST	GRS	GALVANIZED RIGID STEEL (CONDUIT)	KV	KILOVOLT	MH	MANHOLE	NL	NIGHT LIGHT	PT	POTENTIAL TRANSFORMER	SSW	SELECTOR SWITCH	UE	UNDERGROUND ELECTRICAL	XFR	TRANSFER		
AMP	AMPERE	CATV	CABLE TELEVISION	DET	DETAIL	EXP	EXPLOSION PROOF	GYP BD	GYPSUM BOARD	KVA	KILOVOLT-AMPERE	MIC	MICROPHONE	N.O.	NORMALLY OPEN	PVC	POLYVINYL CHLORIDE (CONDUIT)	S/S	STOP/START PUSHBUTTONS	UG	UNDERGROUND				
AMPL	AMPLIFIER	CB	CIRCUIT BREAKER	DIA	DIAMETER	FA	FIRE ALARM	HOA	HAND-OFF-AUTOMATIC SWITCH	KVAR	KILOVOLT-AMPERE REACTIVE	MIN	MINIMUM	NPF	NORMAL POWER FACTOR	PWR	POWER	STA	STATION	UH	UNIT HEATER				
ANNUN	ANNUNCIATOR	CCTV	CLOSED CIRCUIT TELEVISION	DISC	DISCONNECT	FABP	FIRE ALARM BOOSTER POWER SUPPLY PANEL	HORIZ	HORIZONTAL	KW	KILOWATT	MISC	MISCELLANEOUS	NTS	NOT TO SCALE	QUAN	QUANTITY	STD	STANDARD	UT	UNDERGROUND TELEPHONE				
APPROX	APPROXIMATELY	CKT	CIRCUIT	DIST	DISTRIBUTION			HP	HORSEPOWER	KWH	KILOWATT HOUR	MLO	MAIN LUGS ONLY	OH	OVERHEAD	RCPT	RECEPTACLE	SURF	SURFACE MOUNTED	UTIL	UTILITY				
AQ-STAT	AQUASTAT	CLG	CEILING	DN	DOWN	FACP	FIRE ALARM CONTROL PANEL	HPF	HIGH POWER FACTOR	LOC	LOCATE OR LOCATION	MMS	MANUAL MOTOR STARTER	OHD	OVERHEAD DOOR	REQD	REQUIRED	SW	SWITCH	UV	UNIT VENTILATOR OR ULTRAVIOLET				
ARCH	ARCHITECT, ARCHITECTURAL	COMB	COMBINATION	DPR	DAMPER	FCU	FAN COIL UNIT	HT	HEIGHT	LT	LIGHT	MOA	MULTIOUTLET ASSEMBLY	OL	OVERLOADS	RM	ROOM	SWBD	SWITCHBOARD						

RACEWAY AND WIRING LEGEND

P2G1-1,3 — HOMERUN TO PANELBOARD, PROVIDE 3/4"C., 2#12 &1#12GND, NUMERALS 1 AND 3 INDICATE CIRCUITS IN PANELBOARD. RACEWAYS LARGER THAN 3/4" AND CONDUCTORS LARGER THAN #12AWG SHALL BE INDICATED ON THE DRAWINGS.

RACEWAY RUN UNDERGROUND OR UNDER SLAB

RACEWAY ABOVE GROUND OR EXPOSED

RACEWAY TO BE DEMOLISHED

POWER LEGEND

60AS / 40AF — FUSIBLE SAFETY SWITCH - SIZE AS NOTED ON THE DRAWINGS (60 AMP SWITCH, 40 AMP FUSE, 3 POLE)

TRANSFORMER

M — WATTHOUR METER

DUPLEX CONVENIENCE GROUND FAULT CIRCUIT INTERRUPTER (GFCI) OUTLET MOUNTED 18" ABOVE FINISHED FLOOR UNLESS NOTED OTHERWISE NEXT TO OUTLET ON DRAWINGS

HH — HANDHOLE

P4G1 — 480V PANELBOARD-SURFACE MOUNTED
- P = PANEL
- 4 = 480V
- G - GENERAL
- L = LIGHTING
- M = MECHANICAL
- 1 = PANEL NUMBER

P2G1 — 208V PANELBOARD-SURFACE MOUNTED
- P = PANEL
- 2 = 208V
- G - GENERAL
- L = LIGHTING
- M = MECHANICAL
- 1 = PANEL NUMBER

NEMA 4 ELECTRICAL CABINET

TRAFFIC LIGHT

EXHAUST FAN

LIGHTING FIXTURE

$ — LIGHT SWITCH

GENERAL ELECTRICAL NOTES

1. DRAWINGS ARE DIAGRAMMATIC ONLY. THE EXACT LOCATION AND ROUTING OF RACEWAYS SHALL BE COORDINATED AND DETERMINED IN THE FIELD.
2. ALL STRAIGHT FEEDERS, BRANCH CIRCUITS AND AUXILIARY SYSTEM CONDUIT RUNS SHALL BE PROVIDED WITH SUFFICIENT HANDHOLES/PULL BOXES TO LIMIT THE MAXIMUM LENGTH OF ANY SINGLE CABLE PULL TO 200 FEET OR NO MORE THAN (3) 90 DEGREE BENDS. EXACT SIZES OF HANDHOLES/PULL BOXES AND LOCATIONS TO BE DETERMINED IN THE FIELD BY THE ELECTRICAL CONTRACTOR.
3. THE ELECTRICAL CONTRACTOR SHALL COORDINATE WITH THE SITE AND GENERAL CONTRACTOR AS APPLICABLE AS TO THE EXACT LOCATION OF THEIR RESPECTIVE EQUIPMENT; THE POWER WIRING, CONTROL WIRING AND ALL ELECTRICAL CONNECTIONS AND CONDUIT TURN-UPS SHALL BE COORDINATED WITH THE RESPECTIVE CONTRACTORS BEFORE THE START OF CONSTRUCTION IN THE FIELD.
4. WORK SHALL CONFORM TO THE 2023 NATIONAL ELECTRICAL CODE WITH MASSACHUSETTS AMENDMENTS, MASSACHUSETTS BUILDING CODE, NFPA AND REQUIREMENTS OF LOCAL AUTHORITIES HAVING JURISDICTION.
5. THE WORD "CONTRACTOR" AS USED IN THE "ELECTRICAL WORK" SHALL MEAN THE ELECTRICAL SUBCONTRACTOR.
6. CONTRACTOR SHALL PAY FOR ALL PERMITS, INSURANCE AND TESTS, AND SHALL PROVIDE LABOR AND MATERIAL TO COMPLETE THE ELECTRICAL WORK SHOWN.
7. A $50,000 ALLOWANCE SHALL BE USED FOR BIDDING PURPOSES. CONTRACTOR SHALL PAY ELECTRIC UTILITY COMPANY BACK CHARGES
8. CONTRACTOR SHALL PROVIDE ALL REQUIRED COORDINATION WITH EVERSOURCE AND OTHER UTILITIES AS REQUIRED.
9. ELECTRIC UTILITY WORK ORDER NUMBER FOR THIS PROJECT IS #XXXXXX.
10. EXCEPT AS OTHERWISE NOTED, THE ELECTRICAL WORK SHALL INCLUDE PANELBOARDS, CIRCUIT BREAKERS, FEEDERS, WIRING, RACEWAYS, OUTLETS, CABINETS, DEVICES AND TRANSFORMERS.
11. THE CONTRACTOR SHALL PROVIDE ALL TEMPORARY LIGHTING AND POWER AND THE GENERAL CONTRACTOR SHALL PAY ALL ENERGY CHARGES FOR TEMPORARY POWER AND LIGHTING.
12. DURING CONSTRUCTION, THE ELECTRICAL CONTRACTOR SHALL KEEP HIS PORTION OF THE WORK NEAT, CLEAN AND ORDERLY.
13. ALL SYSTEMS SHALL BE TESTED FOR SHORT CIRCUIT AND GROUNDS PRIOR TO ENERGIZING AND ANY DEFECTS SHALL BE CORRECTED.
14. ALL CUTTING AND PATCHING REQUIRED FOR ELECTRICAL WORK SHALL BE INCLUDED AS PART OF THIS SECTION.
15. COMPLETE SHOP DRAWINGS SHALL BE SUBMITTED FOR ELECTRICAL EQUIPMENT. WHERE SPECIFIED ELECTRICAL EQUIPMENT IS SUBSTITUTED, THE ELECTRICAL CONTRACTOR SHALL SUBMIT COMPLETE SPECIFICATIONS ON THE SUBSTITUTE AS WELL AS THE ITEM ORIGINALLY SPECIFIED.
16. MATERIALS SHALL BE SPECIFICATION GRADE AND UL LISTED.
17. WHERE MATERIAL IS CALLED OUT IN THE LEGEND BY MANUFACTURER, TYPE OR CATALOG NUMBER, SUCH DESIGNATIONS ARE TO ESTABLISH STANDARDS OR DESIRED QUALITY. ACCEPTANCE OR REJECTIONS OF PROPOSED SUBSTITUTIONS SHALL BE SUBJECT TO THE APPROVAL OF THE OWNER.
18. WORK SHALL BE COORDINATED WITH THAT OF OTHER TRADES TO ELIMINATE INTERFERENCES.
19. ELECTRICAL CONTRACTOR SHALL OBTAIN SHOP DRAWINGS/SPECIFICATIONS OF ALL EQUIPMENT FROM THE GENERAL CONTRACTOR PRIOR TO PURCHASING AND INSTALLING ELECTRICAL EQUIPMENT FOR SAME. NOTIFY ENGINEER OF ANY DISCREPANCIES BETWEEN ACTUAL EQUIPMENT INSTALLED AND CONTRACT DOCUMENTS.
20. ELECTRICAL WORK SHALL BE GUARANTEED FOR A PERIOD OF ONE YEAR FROM DATE OF FINAL COMPLETION UNLESS A LONGER WARRANTY IS SPECIFIED ELSEWHERE.
21. WORK SHALL BE GROUNDED IN ACCORDANCE WITH CODE REQUIREMENTS. COMPLETE EQUIPMENT (INSULATED GREEN WIRE) GROUNDING SYSTEM SHALL BE INSTALLED.
22. WIRING METHODS:
    a. EXTERIOR UNDERGROUND FEEDERS SHALL BE PVC SCHEDULE 80 FOR DIRECT BURIED AND PVC SCHEDULE 40 FOR CONCRETE ENCASED.
    b. EXTERIOR ABOVE GRADE FEEDERS SHALL BE RGS CONDUIT.
    c. INTERIOR EXPOSED FEEDERS SHALL BE RGS CONDUIT.
    d. EQUIPMENT CONNECTIONS SHALL BE LIQUID TIGHT FLEXIBLE METAL CONDUIT.
24. CONNECTORS FOR RIGID CONDUIT SHALL BE MADE WITH THREADED COUPLINGS.
25. CONTRACTOR SHALL CHECK EXISTING CONDITIONS TO DETERMINE EXACT EXTENT OF WORK TO BE PERFORMED PRIOR TO BIDDING. DIMENSIONS RELEVANT TO EXISTING WORK SHALL BE VERIFIED IN THE FIELD.
26. PROVIDE AS-BUILT "CADD" DRAWINGS AT THE COMPLETION OF THE PROJECT.
27. ELECTRICAL CONTRACTOR SHALL LABEL ALL ELECTRICAL DEVICES INCLUDING BUT NOT LIMITED TO RECEPTACLES, TEL/DATA OUTLETS, DISCONNECT SWITCHES, PANELBOARDS, THERMAL MOTOR SWITCHES, CONTROL PANELS, JUNCTION BOXES, ETC.
    a. RECEPTACLES - PANEL NAME AND CIRCUIT DESIGNATION
    b. DISCONNECTS - PANEL NAME, CIRCUIT DESIGNATION AND EQUIPMENT SERVICING
    c. PANELBOARD - PANEL NAME, VOLTAGE, AMPERAGE, PHASE AS WELL AS PANEL AND CIRCUIT IT IS FED FROM.
    d. CONTROL PANEL - PANEL NAME AND CIRCUIT DESIGNATION
39. ADDRESS QUESTIONS TO THE ENGINEER IN WRITING BEFORE AWARD OF CONTRACT, OTHERWISE ENGINEERS INTERPRETATION OF MEANING AND INTENT OF DRAWINGS SHALL BE FINAL.

ELECTRICAL DEMOLITION NOTES

1. SYSTEMS WHICH PASS THROUGH THE AREA BEING DEMOLISHED BUT CONTINUE TO AREAS NOT WITHIN THE DEMOLITION SCOPE ARE TO REMAIN. THE ELECTRICAL CONTRACTOR IS TO IDENTIFY (SPRAY PAINT OR EQUIVALENT) AND PROTECT THOSE SYSTEMS WHICH ARE ACTIVE AND ARE TO REMAIN.
2. ALL EXISTING CAST IN PLACE RECEPTACLE, PULL, JUNCTION AND OTHER DEVICE BOXES WHICH CANNOT BE REMOVED OR EFFECTIVELY COVERED ARE TO BE PROVIDED WITH FINISHED PLATES AS APPROVED BY THE ENGINEER.
3. ALL CONDUIT AND WIRE WHICH IS NO LONGER IN USE IS TO BE REMOVED. CONDUIT AND WIRE IS TO BE REMOVED BACK TO ITS SOURCE OR NEAREST DEVICE WHICH IS SCHEDULED TO REMAIN. COORDINATE THE REMOVAL OF ALL COMMUNICATIONS CONDUIT AND WIRE WITH THE COMMUNICATIONS CONTRACTOR. UNDER NO CIRCUMSTANCES ARE ABANDONED CONDUIT AND WIRE OR SYSTEM COMPONENTS TO REMAIN.
4. MAKE ANY NECESSARY RE-CIRCUITING, EXTENSIONS OF EXISTING CIRCUITS AND RELOCATIONS REQUIRED TO PROPERLY RE-ENERGIZE REMAINING EXISTING SERVICES OR EQUIPMENT THAT MAY BE INTERFERED WITH BY NEW CONSTRUCTION, REMOVALS OR RELOCATIONS. ALL SHUTDOWNS TO RELOCATE ACTIVE FEEDERS OR BRANCH CIRCUITS WILL BE PERFORMED ON OFF HOURS AS MUTUALLY AGREED TO WITH THE OWNER.
5. PRIOR TO REMOVAL OF EQUIPMENT, CONFIRM THAT FEEDER AND BRANCH CIRCUITS ARE NO LONGER ACTIVE. SHOULD IT BE DISCOVERED THE FEEDER OR BRANCH CIRCUITS ARE ACTIVE, NOTIFY THE ARCHITECT IMMEDIATELY FOR DIRECTION.
6. ELECTRICAL CONTRACTOR IS TO REMOVE ALL LAMPS, BALLASTS AND OTHER ELECTRICAL COMPONENTS CLASSIFIED AS HAZARDOUS MATERIALS. ELECTRICAL CONTRACTOR IS TO OBTAIN THE SERVICES OF A LICENSED HAZARDOUS MATERIALS CONTRACTOR TO DISPOSE OF THE MATERIALS. PROVIDE WRITTEN DOCUMENTATION TO THE OWNER'S REPRESENTATIVE FROM THE HAZARDOUS MATERIALS CONTRACTOR.
7. ELECTRICAL DEMOLITION ABBREVIATIONS:

   "XM" DENOTES EXISTING EQUIPMENT TO REMAIN.

   "RL" DENOTES EXISTING EQUIPMENT TO BE DISCONNECTED AND RELOCATED. ALL EXISTING CONDUIT AND WIRE SHALL BE REMOVED BACK TO ITS SOURCE AND ALL DEVICES ASSOCIATED WITH THE EQUIPMNET SHALL BE REMOVED OR ALL CONDUIT AND WIRE SHALL BE INTERCEPTED AND EXTENDED AS REQUIRED. ALL NEW CONDUIT AND WIRE SHALL MATCH EXISTING IN STYLE AND SIZE. ALL EXISTING ELECTRICAL DEVICES ASSOCIATED WITH THE EXISTIGN EQUIPMENT SHALL BE REMOVED AND NEW DEVICES AS SHOWN SHALL BE PROVIDED.

   "NL" DENOTES NEW LOCATION OF RELOCATED EXISTING EQUIPMENT.

   "RE" DENOTES EXISTING EQUIPMENT TO BE DISCONNECTED AND REMOVED ALL EXISTING CONDUIT AND WIRE SHALL BE REMOVED BACK TO ITS SOURCE AND ALL DEVICES ASSOCIATED WITH THE EQUIPMENT SHALL BE REMOVED.

Project:
TOWN OF CHATHAM
TRANSFER STATION
REDEVELOPMENT PROJECT
97 SAM RYDER ROAD, CHATHAM MA

Weston & Sampson
Weston & Sampson Engineers, Inc.
55 Walkers Brook Drive, Suite 100
Reading, MA 01867
978.532.1900 800.SAMPSON
www.westonandsampson.com

Consultants:

Revisions:

No.	Date	Description

COA:

Seal:

Issued For:
BIDDING

Scale: NOT TO SCALE

Date:	MARCH 13, 2026
Drawn By:	TPV
Reviewed By:	DCH/DNM
Approved By:	RFM
W&S Project No.:	ENG25-1356
W&S File No.:	-

Drawing Title:
ELECTRICAL LEGEND, ABBREVIATIONS, AND GENERAL NOTES

Sheet Number:
E001

COPYRIGHT © 2026 WESTON & SAMPSON, INC.

P:\MA\Chatham MA\25-356 - Transfer Station Redevelopment\06-BIM-CAD\14-Electrical\E001 - Electrical Legend, Abbreviations, and General Notes.dwg

DRAWING NOTES:

1. REFER TO DRAWING E001 FOR LEGENDS, ABBREVIATIONS, DEMOLITION NOTES AND GENERAL NOTES.
2. REFER TO DRAWINGS E501 & E502 FOR ELECTRICAL DETAILS.
3. REFER TO DRAWING E601 FOR ONE LINE DIAGRAMS AND SCHEDULES.

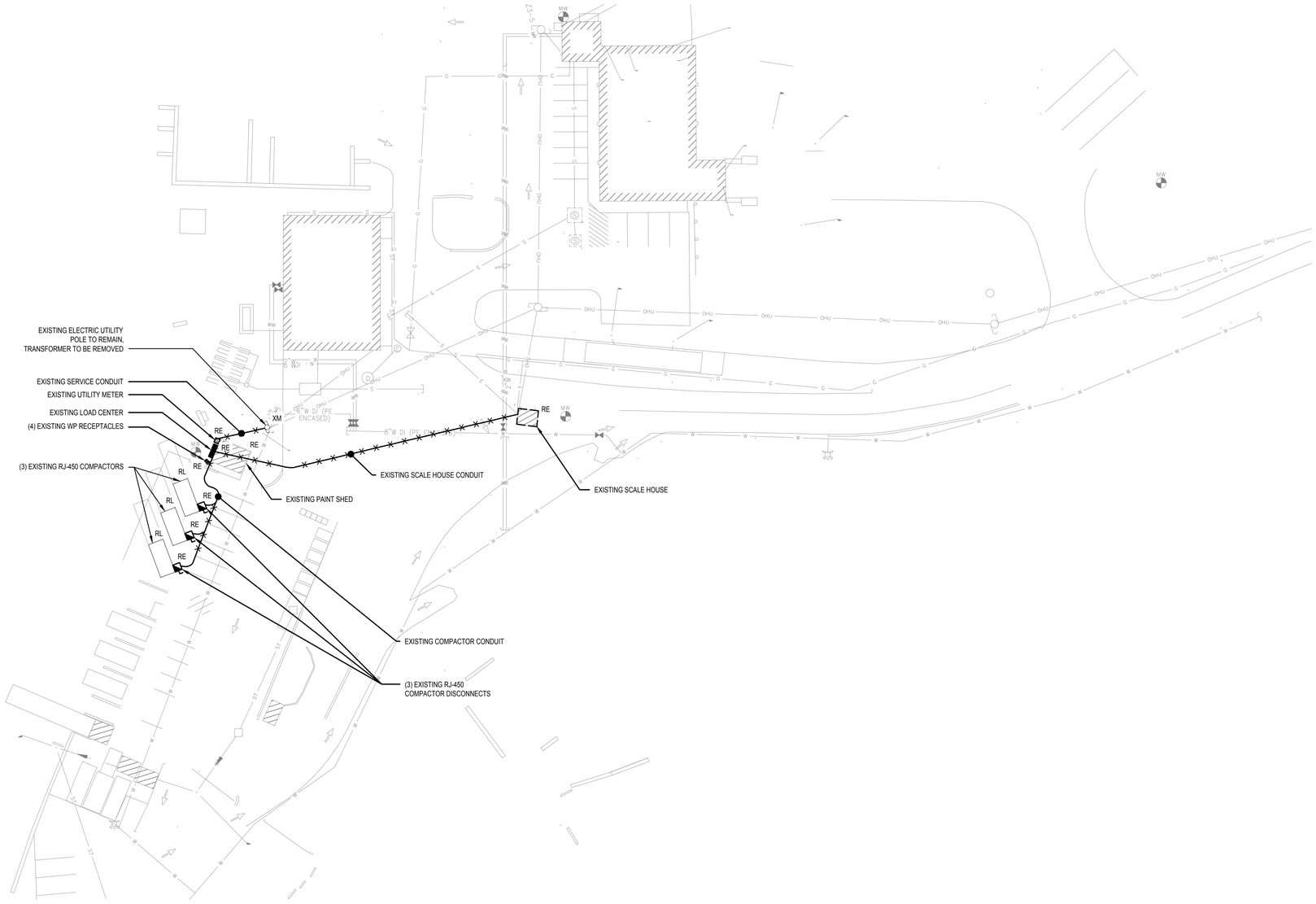

1 ELECTRICAL SITE DEMOLITION PLAN

SCALE: 1" = 30'-0"

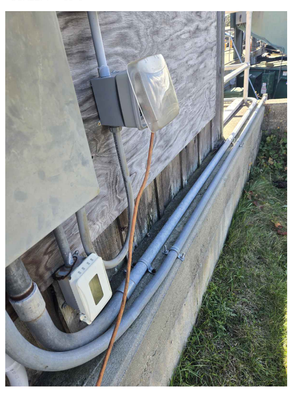

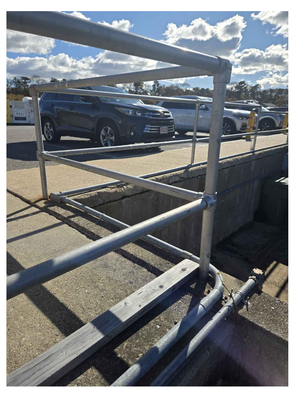

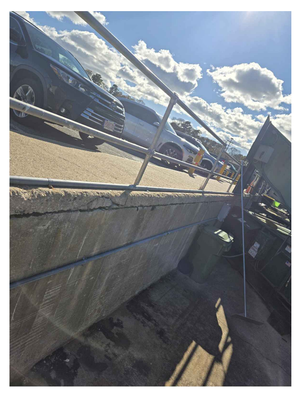

2 EXISTING CONDUIT RUN TO COMPACTORS

SCALE: NOT TO SCALE

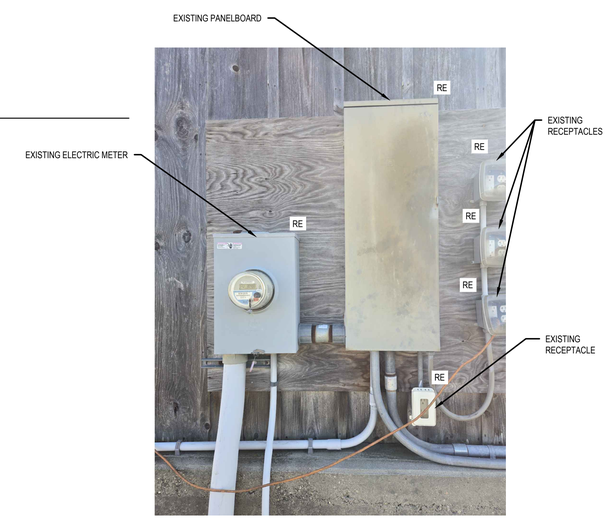

3 PAINT SHED ELECTRICAL EQUIPMENT

SCALE: NOT TO SCALE

0' 15' 30' 60'

SCALE: 1" = 30'

Project:

TOWN OF CHATHAM
TRANSFER STATION
REDEVELOPMENT PROJECT
97 SAM RYDER ROAD, CHATHAM MA

TOWN OF CHATHAM INCORPORATED JUNE 11 1712 MASS.

Weston & Sampson

Weston & Sampson Engineers, Inc.
55 Walkers Brook Drive, Suite 100
Reading, MA 01867
978.532.1900 800.SAMPSON
www.westonandsampson.com

Consultants:

Revisions:

No.	Date	Description

COA:

Seal:

COMMONWEALTH OF MASSACHUSETTS ROBERT F. McALEER ELECTRICAL No. 48017 REGISTERED PROFESSIONAL ENGINEER

Issued For:

BIDDING

Scale: AS NOTED

Date:	MARCH 13, 2026
Drawn By:	TPV
Reviewed By:	DCH/DNM
Approved By:	RFM
W&S Project No.:	ENG25-1356
W&S File No.:	-

Drawing Title:

ELECTRICAL SITE DEMOLITION PLAN

Sheet Number:

ED002

COPYRIGHT © 2026 WESTON & SAMPSON, INC.

P:\MA\Chatham MA\25-1356 - Transfer Station Redevelopment\06 BIM\25-11 Electrical\E2\002 - Electrical Demolition Plan.dwg

DRAWING NOTES:

1. REFER TO DRAWING E001 FOR LEGENDS, ABBREVIATIONS AND GENERAL NOTES
2. REFER TO DRAWINGS E501 & E502 FOR ELECTRICAL DETAILS
3. REFER TO DRAWING E601 FOR ELECTRICAL ONE LINE AND SCHEDULES

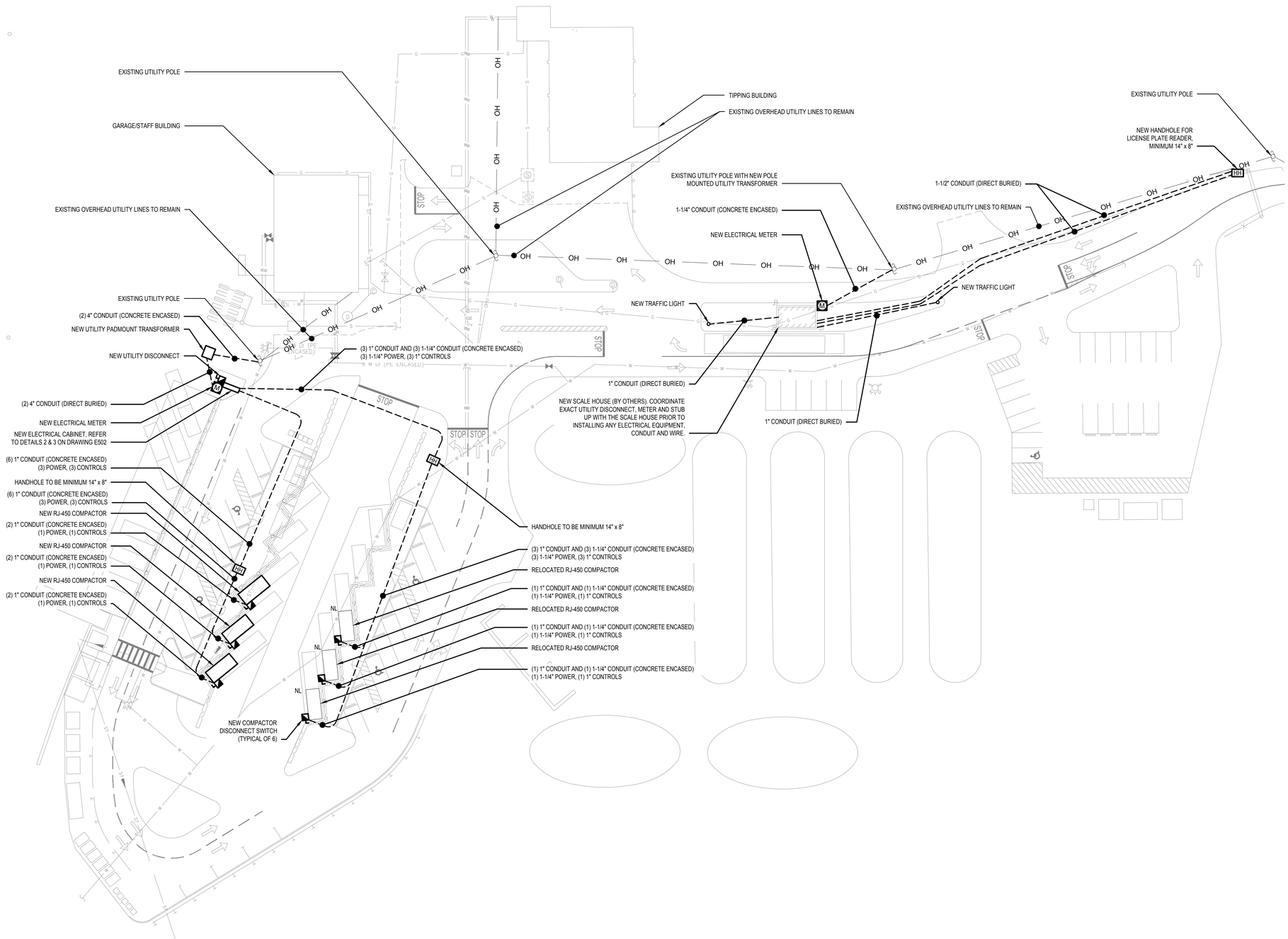

1 ELECTRICAL SITE PLAN

SCALE: 1" = 30'-0"

0' 15' 30' 60'

SCALE: 1" = 30'

Project:

TOWN OF CHATHAM
TRANSFER STATION
REDEVELOPMENT PROJECT
97 SAM RYDER ROAD, CHATHAM MA

TOWN OF CHATHAM INCORPORATED JUNE 11 1712 MASS.

Weston & Sampson

Weston & Sampson Engineers, Inc.
55 Walkers Brook Drive, Suite 100
Reading, MA 01867
978.532.1900 800.SAMPSON
www.westonandsampson.com

Consultants:

Revisions:

No.	Date	Description

COA:

Seal:

COMMONWEALTH OF MASSACHUSETTS ROBERT F. McALEER ELECTRICAL No. 48017 REGISTERED PROFESSIONAL ENGINEER

Issued For:

BIDDING

Scale: 1" = 30'-0"

Date:	MARCH 13, 2026
Drawn By:	TPV
Reviewed By:	DCH/DNM
Approved By:	RFM
W&S Project No.:	ENG25-1356
W&S File No.:	-

Drawing Title:

ELECTRICAL SITE PLAN

Sheet Number:

E002

P:\MA-Chatham MA\25-1356 - Transfer Station Redevelopment\06-BIM-CAD\11-Electrical\E002 - Electrical Site Plan.dwg

COPYRIGHT © 2026 WESTON & SAMPSON, INC.

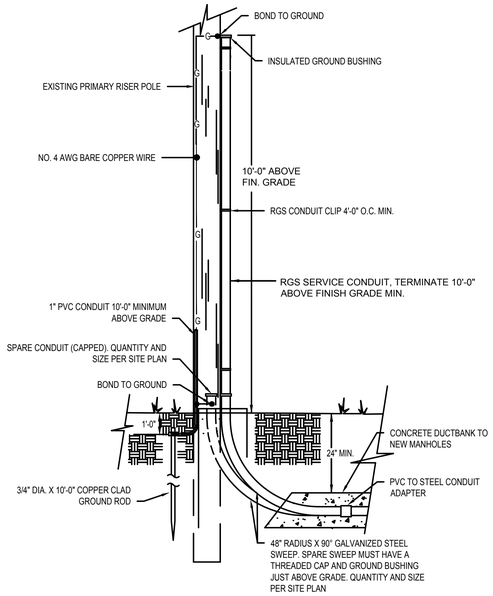

1 TYPICAL RISER POLE DETAIL

NOT TO SCALE

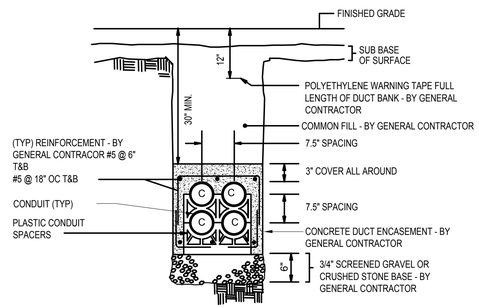

2 TYPICAL 2X2 CONCRETE ENCASED DUCTBANK DETAIL

NOT TO SCALE

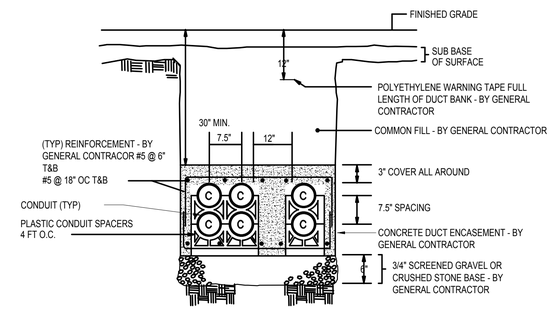

3 TYPICAL 2X2 CONCRETE ENCASED DUCTBANK WITH COMMUNICATIONS DETAIL

NOT TO SCALE

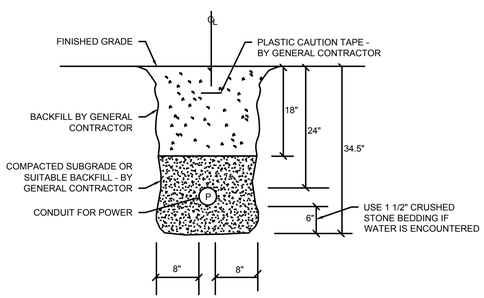

4 TYPICAL DIRECT BURIED CONDUIT DETAIL

NOT TO SCALE

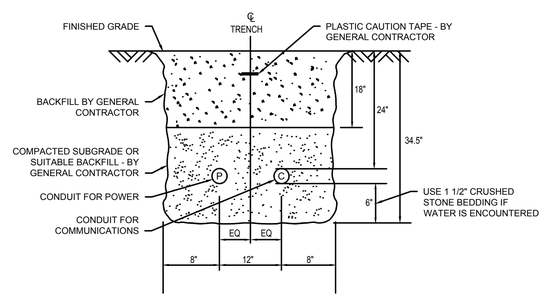

5 TYPICAL DIRECT BURIED CONDUIT WITH COMMUNICATIONS DETAIL

NOT TO SCALE

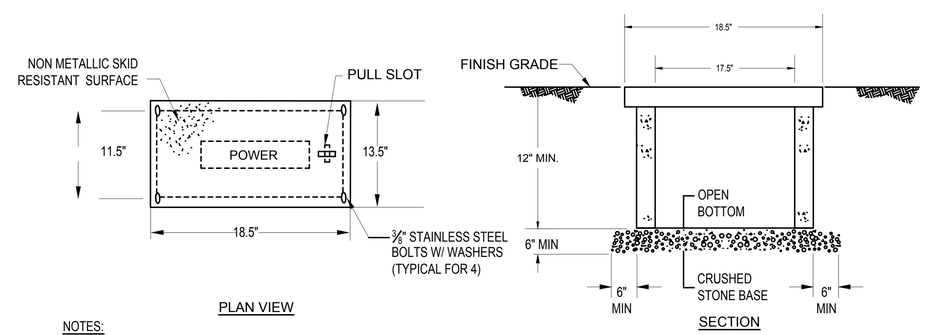

NOTES:

1. THIS HANDHOLE SHALL BE H-20 LOAD RATED.
2. HANDHOLE SHALL BE PREFABRICATED POLYMER CONCRETE AGGREGATE EQUAL TO QUAZITE OR EQUAL PRE CAST CONCRETE CONSTRUCTION.
3. SIZE INDICATED IS THE MINIMUM ACCEPTABLE. CONTRACTOR SHALL COORDINATE EXACT SIZE REQUIRED BASED ON THE APPLICABLE NUMBER OF CONDUITS.

6 HANDHOLE DETAIL

NOT TO SCALE

Project:
TOWN OF CHATHAM
TRANSFER STATION
REDEVELOPMENT PROJECT
97 SAM RYDER ROAD, CHATHAM MA

TOWN OF CHATHAM INCORPORATED JUNE 11 1712 MASS.

Weston & Sampson
Weston & Sampson Engineers, Inc.
55 Walkers Brook Drive, Suite 100
Reading, MA 01867
978.532.1900 800.SAMPSON
www.westonandsampson.com

Consultants:

Revisions:

No.	Date	Description

COA:

Seal:
COMMONWEALTH OF MASSACHUSETTS ROBERT F. McALEER ELECTRICAL No. 48017 REGISTERED PROFESSIONAL ENGINEER

Issued For:
BIDDING

Scale: NOT TO SCALE

Date:	MARCH 13, 2026
Drawn By:	TPV
Reviewed By:	DCH/DNM
Approved By:	RFM
W&S Project No.:	ENG25-1356
W&S File No.:	-

Drawing Title:
ELECTRICAL DETAILS

Sheet Number:
E501

COPYRIGHT © 2026 WESTON & SAMPSON, INC.

P:\MA\Chatham MA\25-1356 - Transfer Station Redevelopment\06.BIM\Ab\11-Electrical\E501 & E502 - Electrical Details.dwg

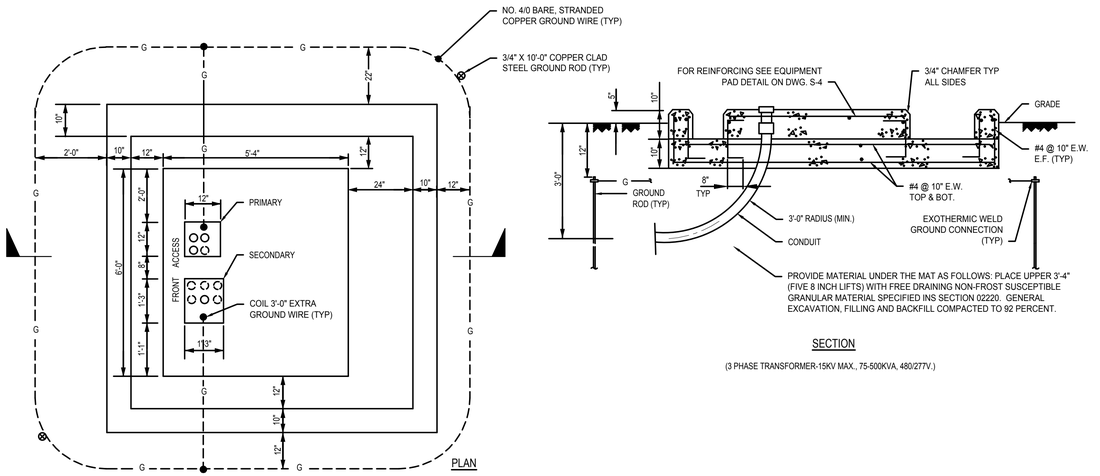

1 PAD MOUNTED TRANSFORMER DETAIL WITH OIL CONTAINMENT (UP TO 300kVA)

NOT TO SCALE

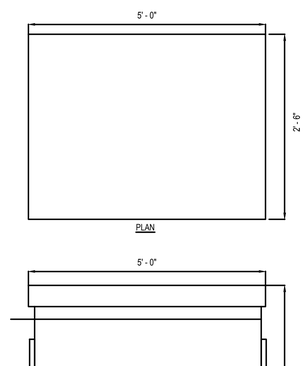

NOTES:

1. CONTRACTOR SHALL COORDINATE WITH THE EXACT CABINET SIZE WITH ALL MANUFACTURER EQUIPMENT SIZES PRIOR TO SUBMITTING THE CABINET FOR APPROVAL. PROVIDE A SCALED DRAWING SHOWING ALL EQUIPMENT.

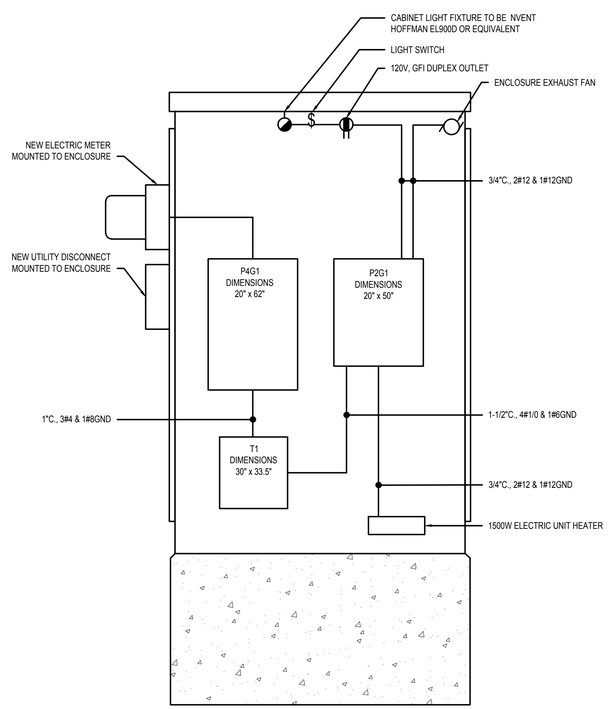

2 ELECTRICAL CABINET ENCLOSURE INTERIOR DETAIL

NOT TO SCALE

3 ELECTRICAL CABINET ENCLOSURE EXTERIOR DETAIL

NOT TO SCALE

Project:
TOWN OF CHATHAM
TRANSFER STATION
REDEVELOPMENT PROJECT
97 SAM RYDER ROAD, CHATHAM MA

Weston & Sampson Engineers, Inc.
55 Walkers Brook Drive, Suite 100
Reading, MA 01867
978.532.1900 800.SAMPSON
www.westonandsampson.com

Consultants:

Revisions:

No.	Date	Description

COA:

Seal:

Issued For: BIDDING

Scale: NOT TO SCALE

Date:	MARCH 13, 2026
Drawn By:	TPV
Reviewed By:	DCH/DNM
Approved By:	RFM
W&S Project No.:	ENG25-1356
W&S File No.:	-

Drawing Title: ELECTRICAL DETAILS II

Sheet Number: E502

COPYRIGHT © 2026 WESTON & SAMPSON, INC.

P:\MA\Chatham MA\25-1356 - Transfer Station Redevelopment\06-BM-CAD\14-Electrical\E501 & E502 - Electrical Details.dwg

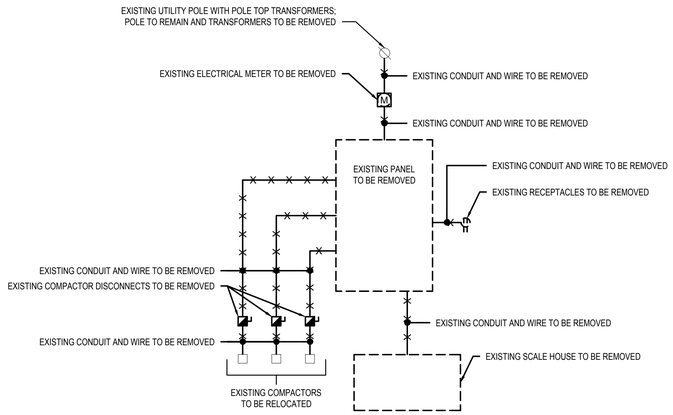

1 DEMOLITION ONE LINE DIAGRAM

NOT TO SCALE

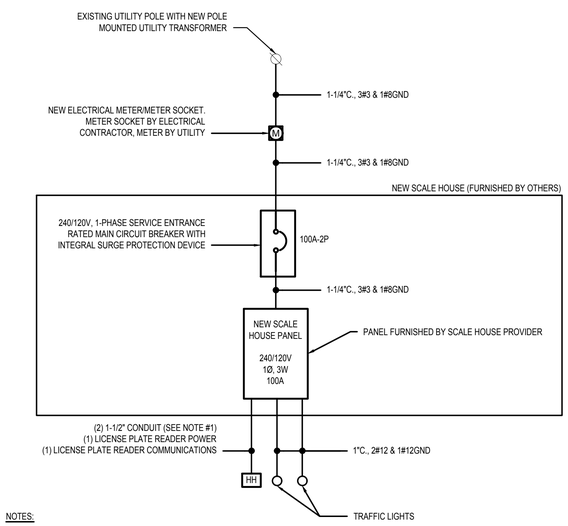

NOTES:

1. WIRING FOR LICENSE PLATE READER TO BE DONE BY OTHERS. MINIMUM 6" SEPARATION BETWEEN CONDUITS SHALL BE MAINTAINED

2 SCALE HOUSE ONE LINE DIAGRAM

NOT TO SCALE

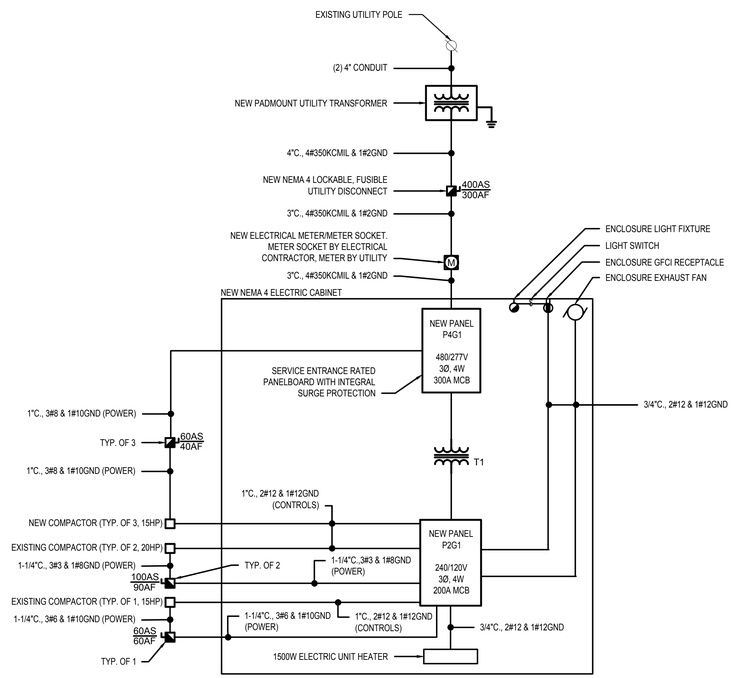

3 COMPACTOR POWER ONE LINE DIAGRAM

NOT TO SCALE

DRY TYPE TRANSFORMER SCHEDULE 480-120/240V

SIZE	KVA	PRIMARY AMPS	SECONDARY AMPS	480 VOLT OVERCURRENT	240 VOLT OVERCURRENT	480V FEEDER CODE	120/240V FEEDER CODE	GROUND SIZE
T1	75	90	180	125A, 3P	200A, 3P	3#1 & 1#6G - 1-1/2"C.	4#3/0 & 1#6G - 2"C.	#6-3/4"C

PANELBOARD SCHEDULE

DESIGNATION: P4G1
LOCATION: NEW ELECTRICAL CABINET
RATING: 400A
MAIN: 300A MCB
S.C. RATING: 30,000AIC
SERVICE: 480/277V, 3Ø, 4W
MOUNTING: SURFACE
REMARKS:

CKT. NO.	LOAD DESIGNATION	CIRCUIT BREAKER	LOAD A	LOAD B	LOAD C	CIRCUIT BREAKER	LOAD DESIGNATION	CKT. NO.
1			28.2					2
3	NEW COMPACTOR, 15HP	40		28.2		200	PANEL P2G1 VIA TRANSFORMER "T1"	4
5					28.2			6
7			5.8			20	SPARE	8
9	NEW COMPACTOR, 15HP	40		5.8		20	SPARE	10
11					5.8	20	SPARE	12
13			5.8			20	SPARE	14
15	NEW COMPACTOR, 15HP	40		5.8		20	SPARE	16
17					5.8	20	SPARE	18
19	SPARE	20	-			20	SPARE	20
21	SPARE	20		-		20	SPARE	22
23	SPARE	20			-	20	SPARE	24
25	SPACE						SPACE	26
27	SPACE						SPACE	28
29	SPACE						SPACE	30
		SUB-TOTAL	39.8	39.8	39.8			
		TOTAL	119.4 KVA					
		ESTIMATED DEMAND LOAD	107.5 KVA					
		TOTAL DEMAND CURRENT	129.3 AMPS					

PANELBOARD SCHEDULE

DESIGNATION: P2G1
LOCATION: NEW ELECTRICAL CABINET
RATING: 225A
MAIN: 200A MCB
S.C. RATING: 14,000AIC
SERVICE: 240/120V, 3Ø, 4W
MOUNTING: SURFACE
REMARKS:

CKT. NO.	LOAD DESIGNATION	CIRCUIT BREAKER	LOAD A	LOAD B	LOAD C	CIRCUIT BREAKER	LOAD DESIGNATION	CKT. NO.
1	NEW COMPACTOR CONTROLS	20	8.0					2
3	SPACE			7.5		90	EXISTING COMPACTOR, 20HP	4
5	NEW COMPACTOR CONTROLS	20			8.0			6
7	NEW COMPACTOR CONTROLS	20	8.0					8
9	SPACE			7.5		90	EXISTING COMPACTOR, 20HP	10
11	NEW COMPACTOR CONTROLS	20			8.0			12
13	NEW COMPACTOR CONTROLS	20	6.3					14
15	SPACE			5.8		60	EXISTING COMPACTOR, 15HP	16
17	NEW COMPACTOR CONTROLS	20			6.3			18
19	ENCLOSURE UNIT HEATER	20	1.2			20	CABINET LIGHT AND RECEPTACLE	20
21	SPACE						SPACE	22
23	ENCLOSURE EXHAUST FAN	20			0.5	20	SPARE	24
25	SPARE	20	-			20	SPARE	26
27	SPACE						SPACE	28
29	SPARE	20			-	20	SPARE	30
		SUB-TOTAL	23.5	20.8	22.8			
		TOTAL	67.1 KVA					
		ESTIMATED DEMAND LOAD	60.4 KVA					
		TOTAL DEMAND CURRENT	145.3 AMPS					

Project:
TOWN OF CHATHAM
TRANSFER STATION
REDEVELOPMENT PROJECT
97 SAM RYDER ROAD, CHATHAM MA

TOWN OF CHATHAM INCORPORATED JUNE 11 1712 MASS.

Weston & Sampson
Weston & Sampson Engineers, Inc.
55 Walkers Brook Drive, Suite 100
Reading, MA 01867
978.532.1900 800.SAMPSON
www.westonandsampson.com

Consultants:

Revisions:

No.	Date	Description

COA:

Seal:

COMMONWEALTH OF MASSACHUSETTS ROBERT F. McALEER ELECTRICAL No. 48017 REGISTERED PROFESSIONAL ENGINEER

Issued For:
BIDDING

Scale: NOT TO SCALE

Date: MARCH 13, 2026
Drawn By: TPV
Reviewed By: DCH/DNM
Approved By: RFM
W&S Project No.: ENG25-1356
W&S File No.: -

Drawing Title:
ELECTRICAL SCHEDULES AND DIAGRAMS

Sheet Number:
E601

COPYRIGHT © 2026 WESTON & SAMPSON, INC.

P:\MA\Chatham - MA25-156 - Transfer Station Redevelopment\06-BIM-CAD\14-Electrical\E601 - Electrical One Line and Schedules.dwg